# CASA FAMILIA

KITCHEN | VANITY | LAUNDRY SHOP-DWGS

**FINISH:**
- K019 SILVER LIBERTY ELM

**APPLIANCES:**

REGULAR UNITS
- 28'' REFRIGERATOR GE MODEL GTE18GSNRSS
- 24'' DISHWASHER GE MODEL GDT535PSRSS
- 30'' RANGE GE MODEL GRF400PV
- 30'' MICROWAVE GE MODEL JVM3160RFSS

ADA UNITS
- 28'' REFRIGERATOR GE MODEL GTE18GSNRSS
- 24'' DISHWASHER GE MODEL GDT225SSLSS ADA
- 30'' RANGE GE MODEL GRS500PVSS ADA
- 30'' MICROWAVE GE MODEL JES1145SHSS
- 30'' HOOD GE MODEL JVX3300SJSS

**GENERAL NOTES:**

*ALL DIMENSIONS ARE FROM FINISHED WALL TO FINISHED WALL
*ALL DIMENSIONS ARE FROM FINISHED FLOOR TO FINISHED CEILING
*NOT INCLUDED: APPLIANCES, FIXTURES, PLUMBING, AND COUNTER TOPS
*ITS ARCHITECTS RESPONSIBILITY TO CONFIRM KITCHEN & VANITY CABINETS COMPLY WITH BUILDING FHA & ADA CODES.

| REVISION LOG | | | |
|---|---|---|---|
| REV. | MM/DD/YYYY | INITIALS | DESCRIPTION |
| 1.0 | 10/6/2023 | V.U | |
| 2.0 | 7/16/2024 | A.C | |
| 3.0 | 9/18/2024 | A.C | |
| 4.0 | 10/30/2024 | A.C | |
| 5.0 | 11/5/2024 | A.C | |
| 6.0 | | | |
| 7.0 | | | |
| 8.0 | | | |
| 9.0 | | | |
| 10.0 | | | |

ITALIAN KITCHEN AND BATH
kitchen | bath | tile | closet
1777 NW 72TH AVE. MIAMI FL, 33126
T. 305.599.9000 F. 305.599.9870

PROJECT #: 23-033
CASA FAMILIA
KITCHEN | VANITIES

DATE: 11/05/2024
REV: 5.0
DIMENSION: CM | INCHES
DRAWN BY: A.C

SHEET NUMBER
COVER

# CASA FAMILIA

## MATRIX

| UNIT NAME | QTY | VANITY TYPE | | | | KITCHEN TYPE | KITCHEN TYPE QTY | |
|---|---|---|---|---|---|---|---|---|
| | TOTAL | V1 | V2 | V3 | V4 | | | |
| | | VANITIES | | | | | | |
| **BUILDING TYPE A** | - | | | | | | **K1** | 32 |
| **UNIT A1** | 14 | 1 | | | | K1 | **K2** | 6 |
| **UNIT A2 FA** | 3 | | 1 | | | K2 | **K3** | 6 |
| **UNIT A3** | 2 | | | 1 | | K1 | **K4** | 6 |
| **UNIT B1** | 3 | 1 | | | 1 | K3 | | |
| **UNIT B2 FA** | 3 | | 1 | | 1 | K4 | | |
| **BUILDING TYPE B** | - | | | | | | | |
| **UNIT A1** | 14 | 1 | | | | K1 | | |
| **UNIT A2 FA** | 3 | | 1 | | | K2 | | |
| **UNIT A3** | 2 | | | 1 | | K1 | | |
| **UNIT B1** | 3 | 1 | | | 1 | K3 | | |
| **UNIT B2 FA** | 3 | | 1 | | 1 | K4 | | |
| | **50** | **34** | **12** | **4** | **12** | | | |
| | | **V1** | **V2** | **V3** | **V4** | | | **50** |

**KITCHEN TOTAL QTY = 50**

**VANITY TOTAL QTY = 62**

ITALIAN KITCHEN AND BATH
kitchen | bath | tile | closet
1777 NW 72TH AVE. MIAMI FL, 33126
T. 305.599.9000 F. 305.599.9870

PROJECT #: 23-033
CASA FAMILIA
KITCHEN | VANITIES

DATE: 11/05/2024
REV: 5.0
DIMENSION: CM | INCHES
DRAWN BY: A.C

SHEET NUMBER
MATRIX

# KITCHEN TYPE K1
## UNIT A1

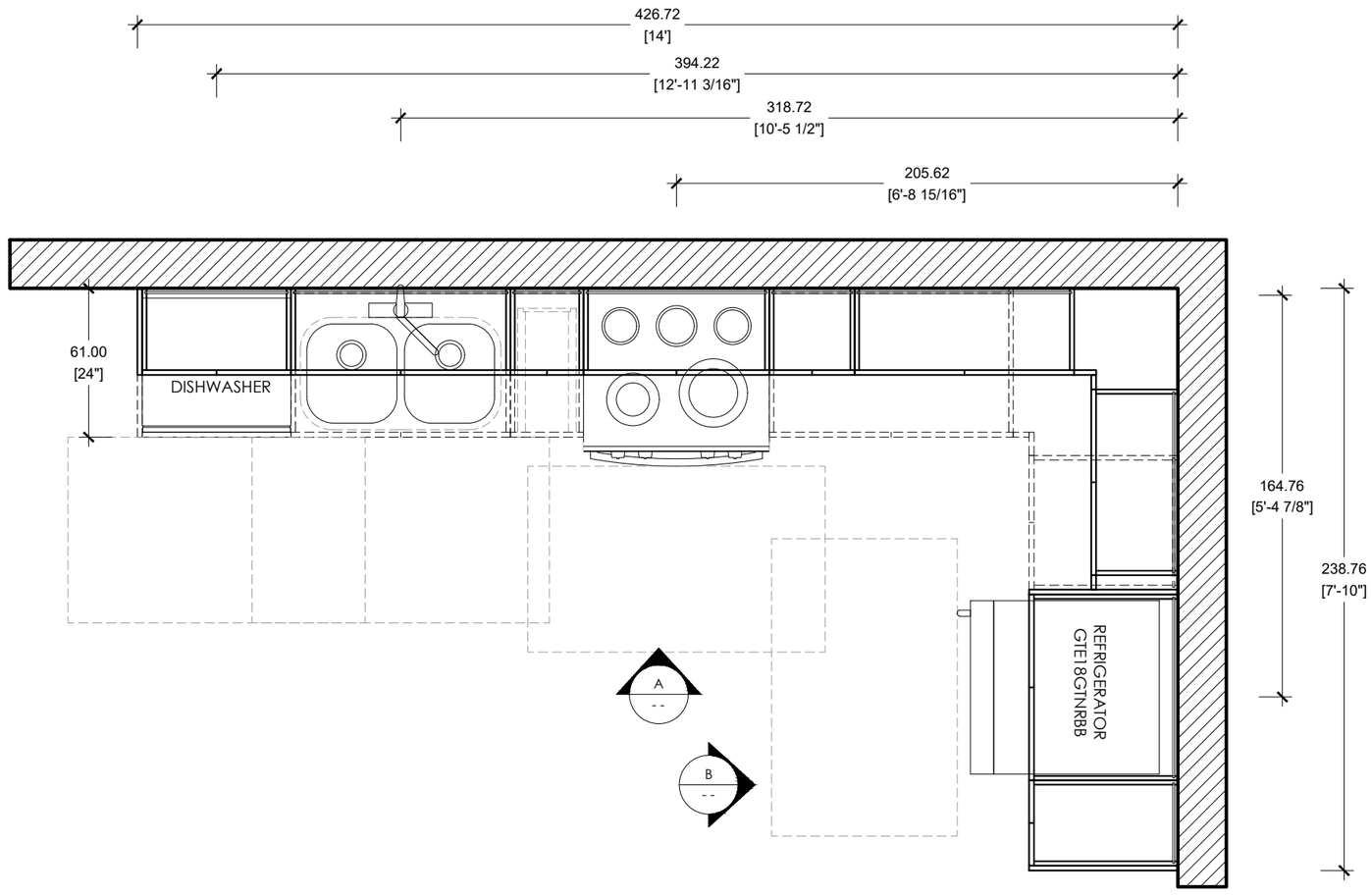


**FLOOR PLAN** SCALE 1/2"=1'-0"
CASA FAMILIA UNIT A1 / KITCHEN TYPE K1


ITALIAN KITCHEN AND BATH
kitchen | bath | tile | closet
1777 NW 72TH AVE. MIAMI FL, 33126
T. 305.599.9000 F. 305.599.9870


PROJECT #: 23-033
CASA FAMILIA
KITCHEN | VANITIES

DATE: 11/05/2024
REV: 5.0
DIMENSION: CM | INCHES
DRAWN BY: A.C

SHEET NUMBER
A.1

# KITCHEN TYPE K1
## UNIT A1

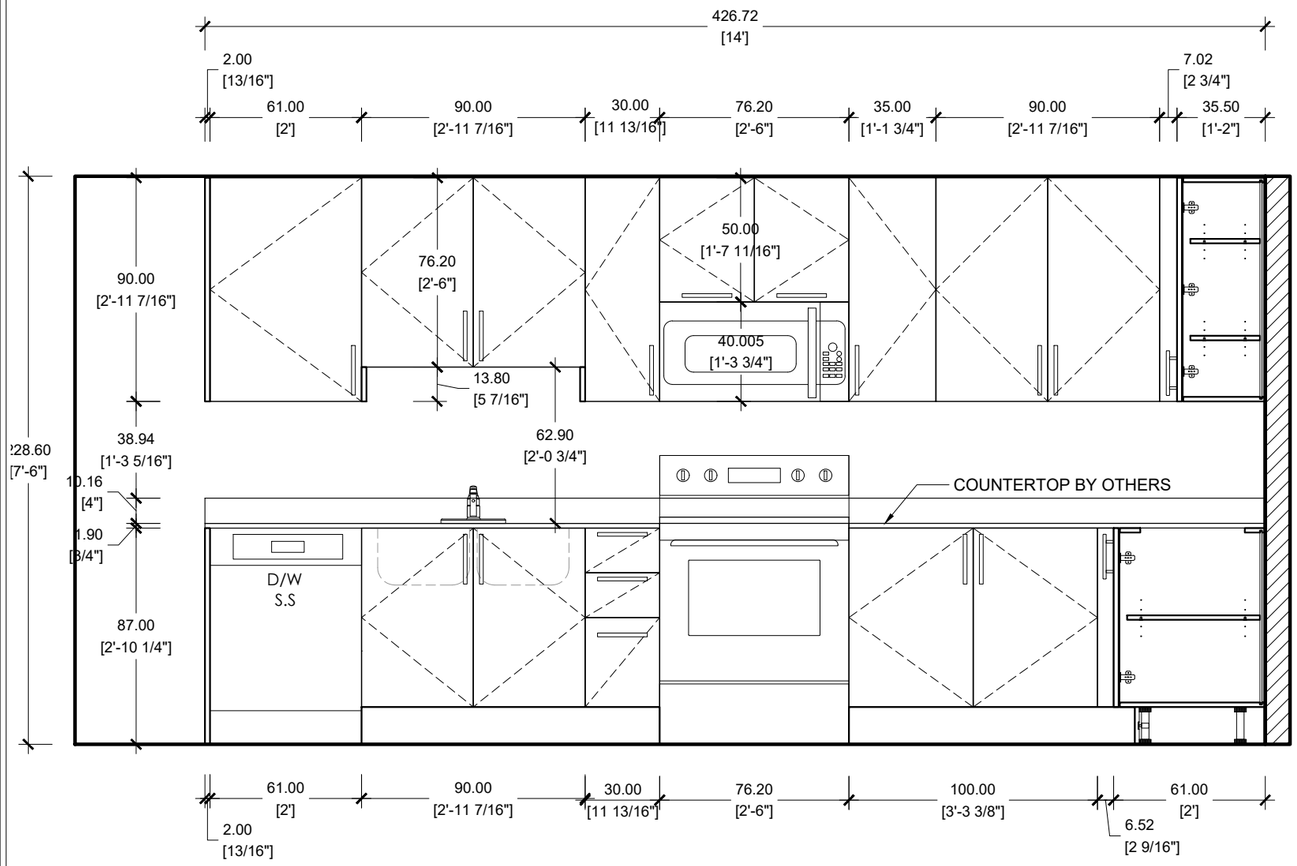


# ELEVATION A
CASA FAMILIA UNIT A1 / KITCHEN TYPE K1

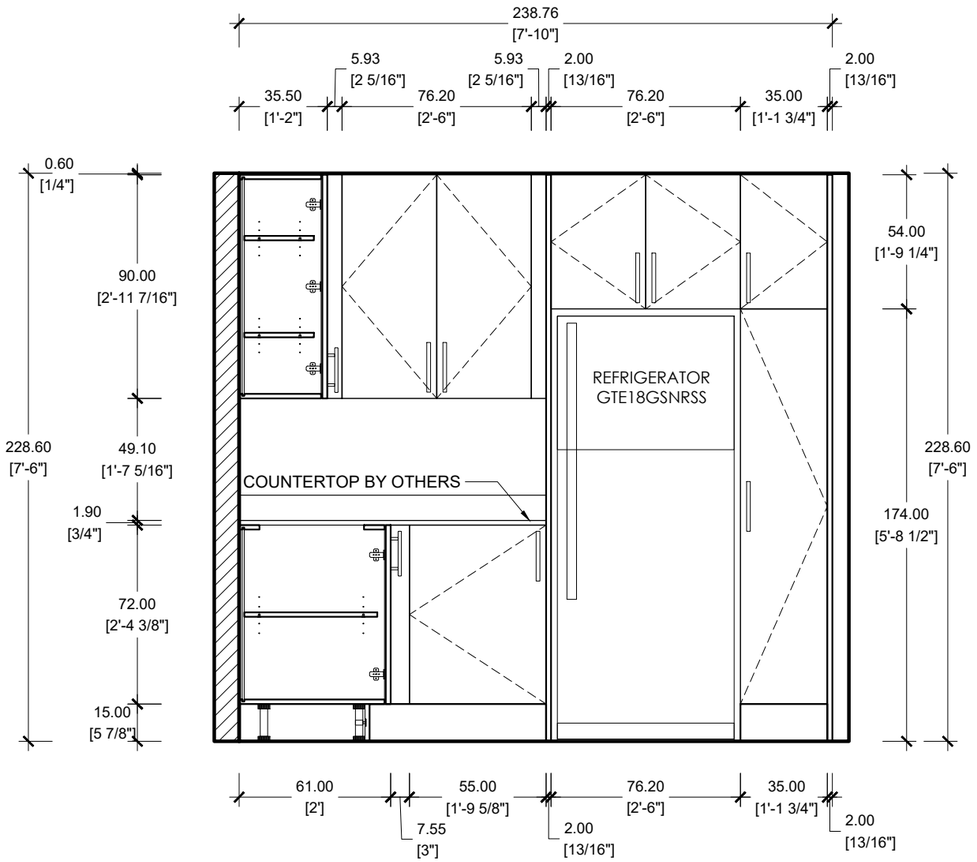


# ELEVATION B
CASA FAMILIA UNIT A1 / KITCHEN TYPE K1


ITALIAN KITCHEN AND BATH
kitchen | bath | tile | closet
1777 NW 72TH AVE. MIAMI FL, 33126
T. 305.599.9000 F. 305.599.9870


PROJECT #: 23-033
CASA FAMILIA
KITCHEN | VANITIES

DATE: 11/05/2024
REV: 5.0
DIMENSION: CM | INCHES
DRAWN BY: A.C

SHEET NUMBER
A.2

# VANITY TYPE V1
UNIT A1

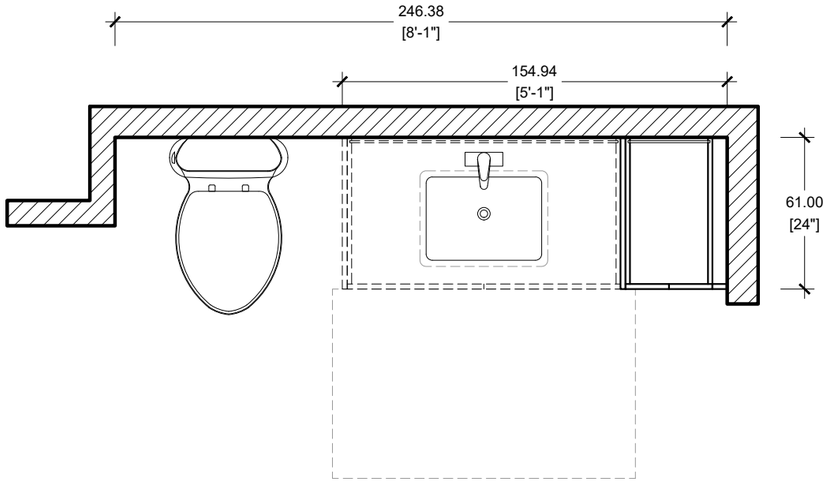


## FLOOR PLAN SCALE 1/2"=1'-0"
CASA FAMILIA UNIT A1 /VANITY TYPE V1

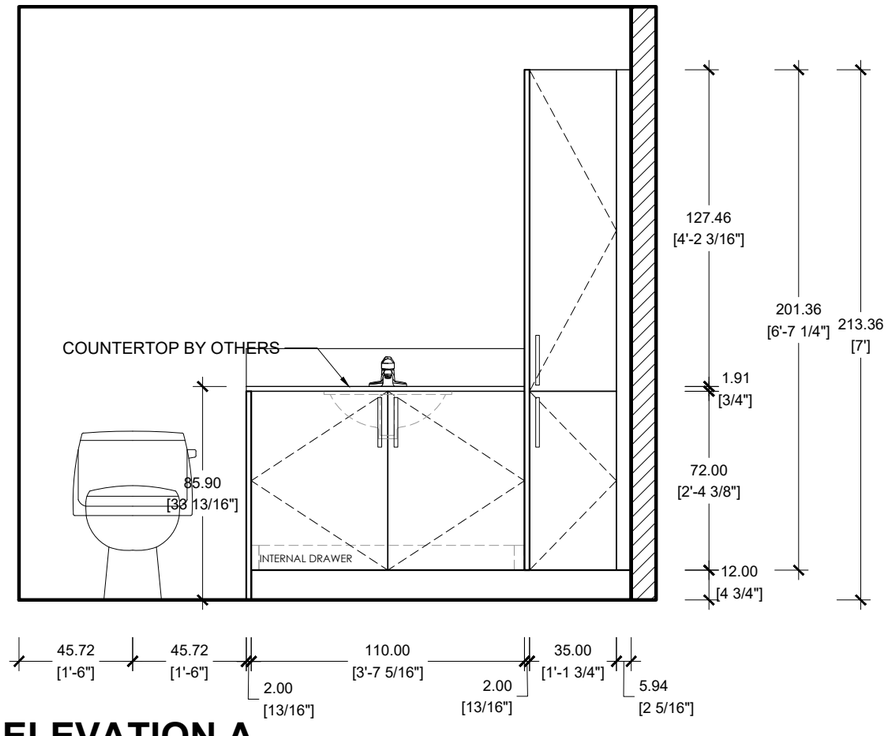


## ELEVATION A
CASA FAMILIA UNIT A1 / VANITY TYPE V1


ITALIAN KITCHEN AND BATH
kitchen | bath | tile | closet
1777 NW 72TH AVE. MIAMI FL, 33126
T. 305.599.9000 F. 305.599.9870


PROJECT #: 23-033
CASA FAMILIA
KITCHEN | VANITIES

DATE: 11/05/2024
REV: 5.0
DIMENSION: CM | INCHES
DRAWN BY: A.C

SHEET NUMBER
A.3

# KITCHEN TYPE K2
## UNIT A2 FA

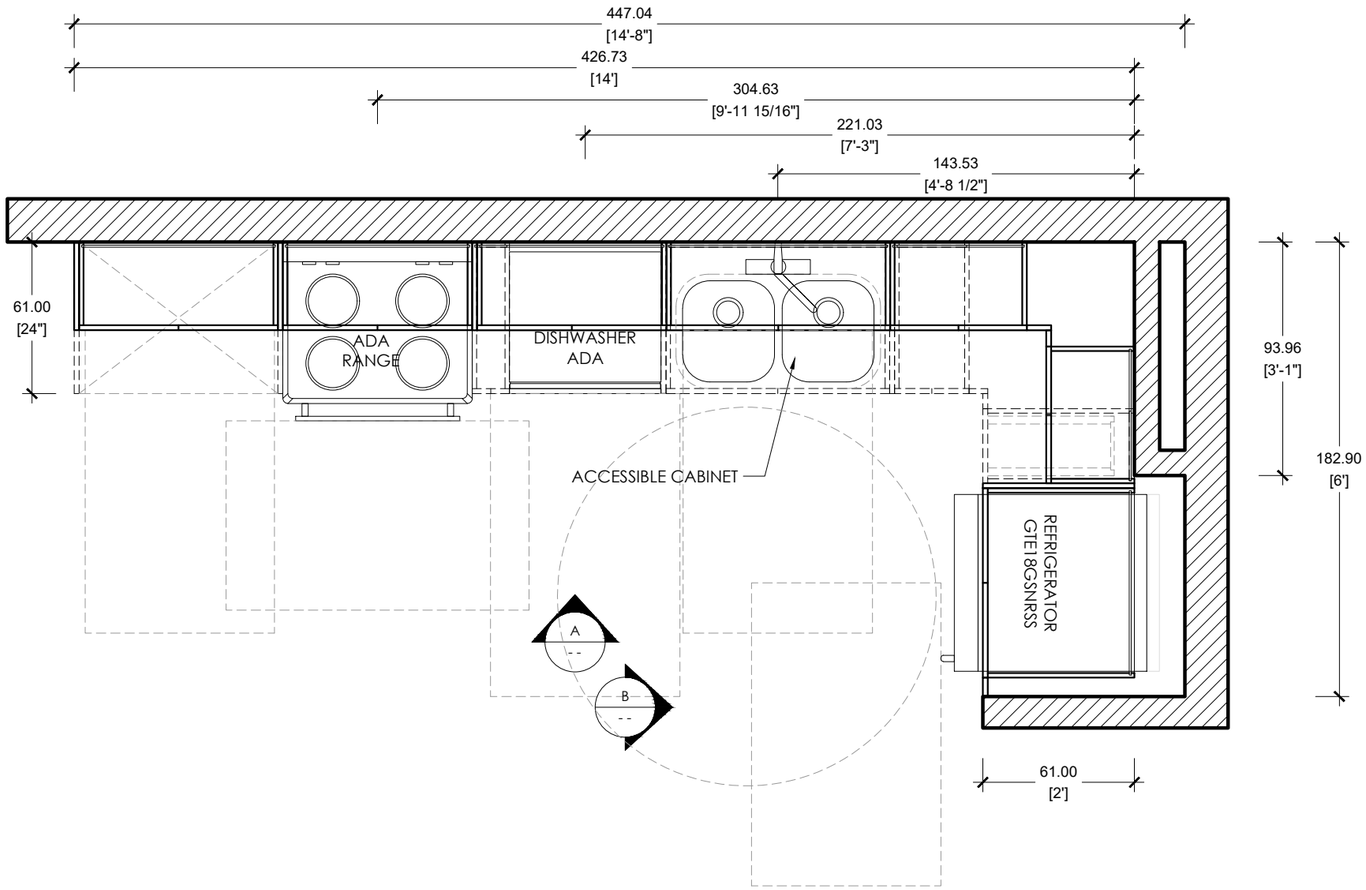


**FLOOR PLAN** SCALE 1/2"=1'-0"

CASA FAMILIA UNIT A2 FA / KITCHEN TYPE K2 ADA

ITALIAN KITCHEN AND BATH

kitchen | bath | tile | closet

1777 NW 72TH AVE. MIAMI FL, 33126

T. 305.599.9000 F. 305.599.9870

PROJECT #: 23-033

CASA FAMILIA

KITCHEN | VANITIES

DATE: 11/05/2024

REV: 5.0

DIMENSION: CM | INCHES

DRAWN BY: A.C

SHEET NUMBER

A.4

# KITCHEN TYPE K2
## UNIT A2 FA

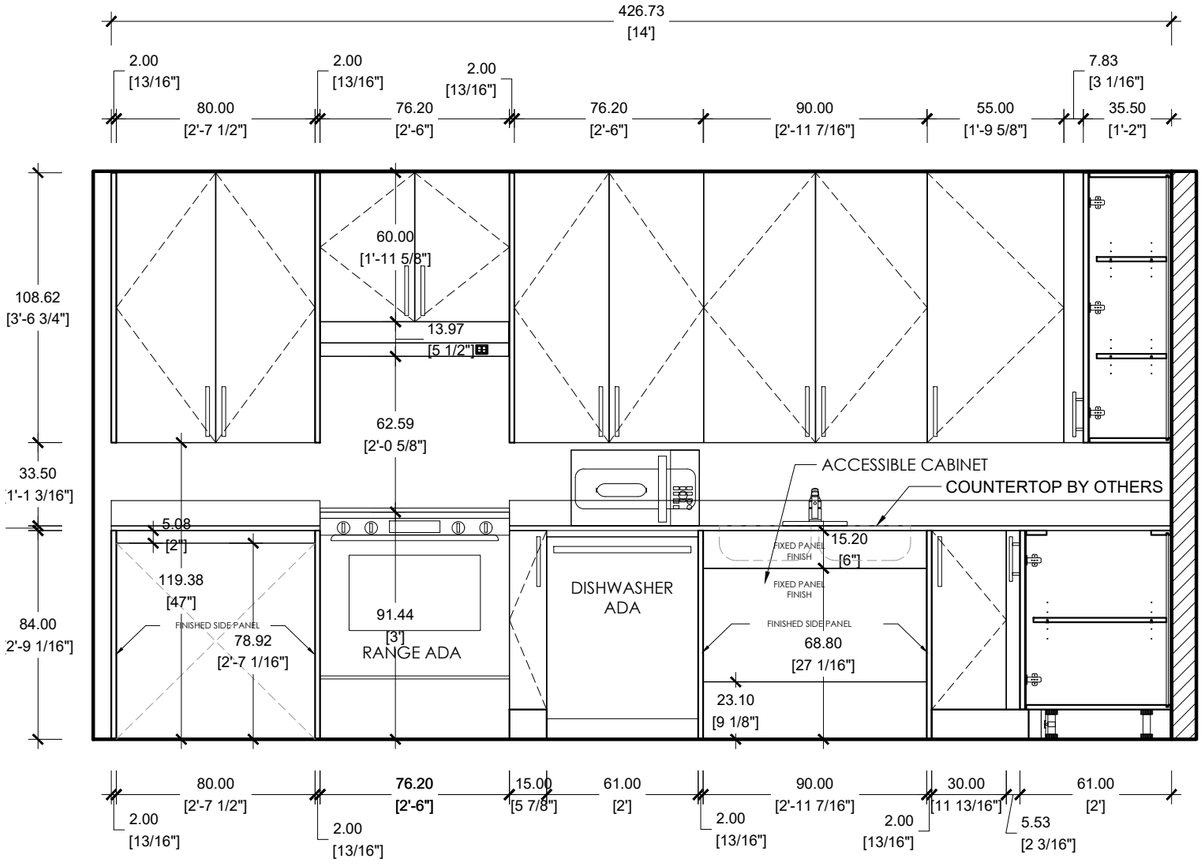


# ELEVATION A
CASA FAMILIA UNIT A2 FA / KITCHEN TYPE K2 ADA

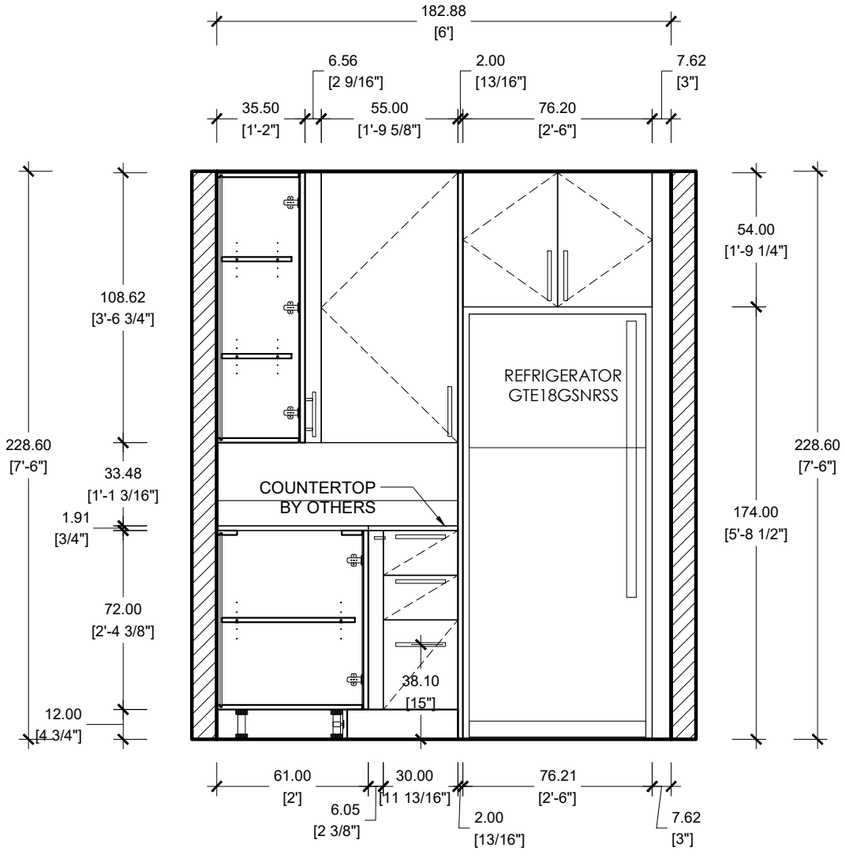


# ELEVATION B
CASA FAMILIA UNIT A2 FA / KITCHEN TYPE K2 ADA

ITALIAN KITCHEN AND BATH
kitchen | bath | tile | closet
1777 NW 72TH AVE. MIAMI FL, 33126
T. 305.599.9000 F. 305.599.9870

PROJECT #: 23-033
CASA FAMILIA
KITCHEN | VANITIES

DATE: 11/05/2024
REV: 5.0
DIMENSION: CM | INCHES
DRAWN BY: A.C

SHEET NUMBER
A.5

# VANITY TYPE V2
## UNIT A2 FA

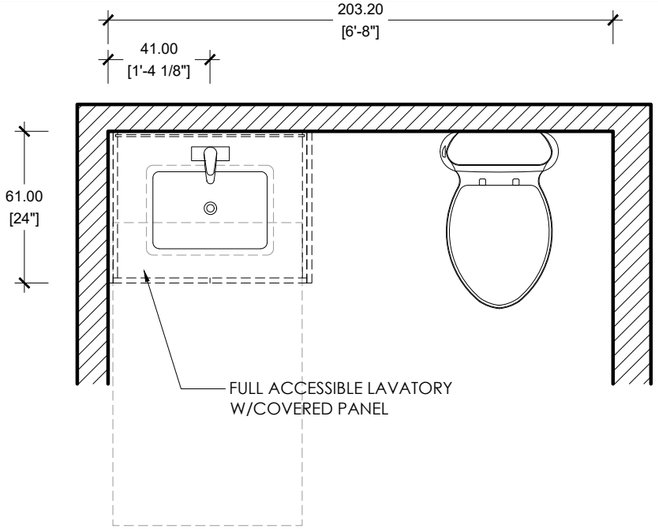


**FLOOR PLAN** SCALE 1/2"=1'-0"
CASA FAMILIA UNIT A2 FA /VANITY TYPE V2

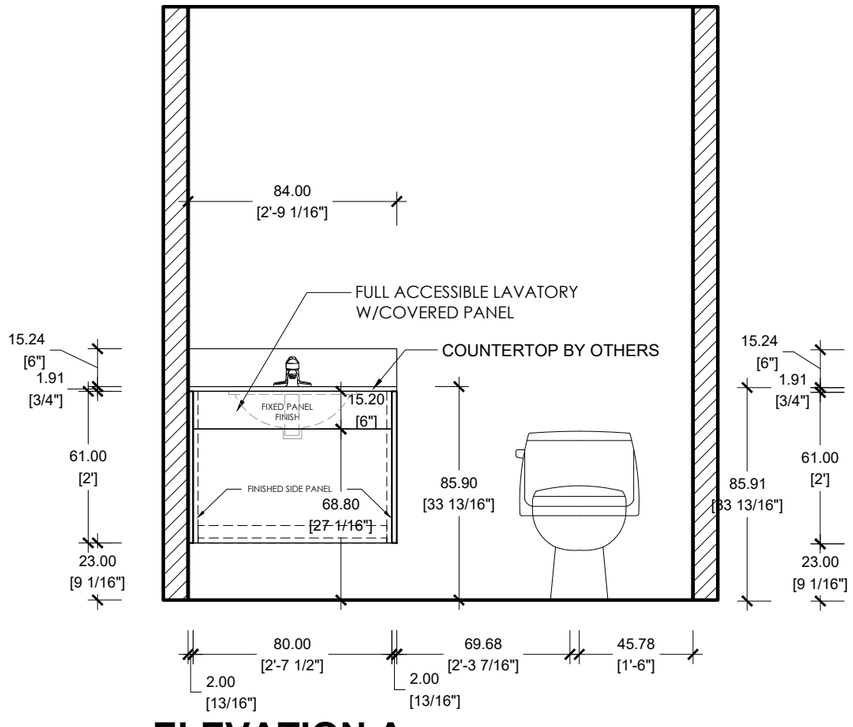


**ELEVATION A**
CASA FAMILIA UNIT A2 FA / VANITY TYPE V2

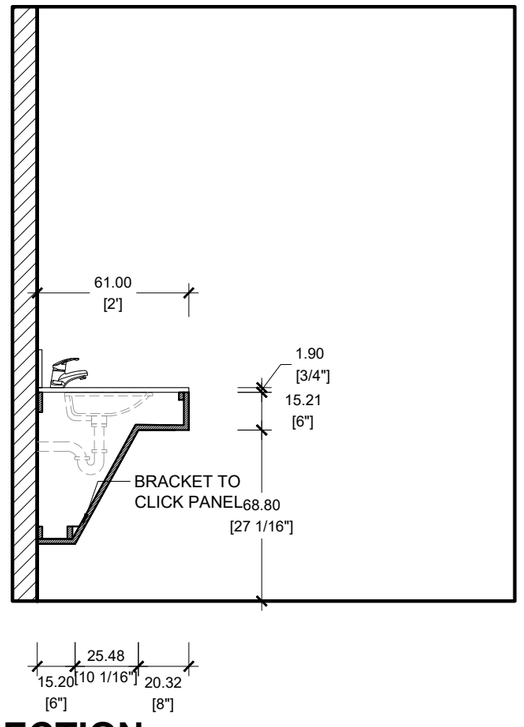


**SECTION** SCALE 1/2"=1'-0"
CASA FAMILIA UNIT A2 FA/ VANITY TYPE V2

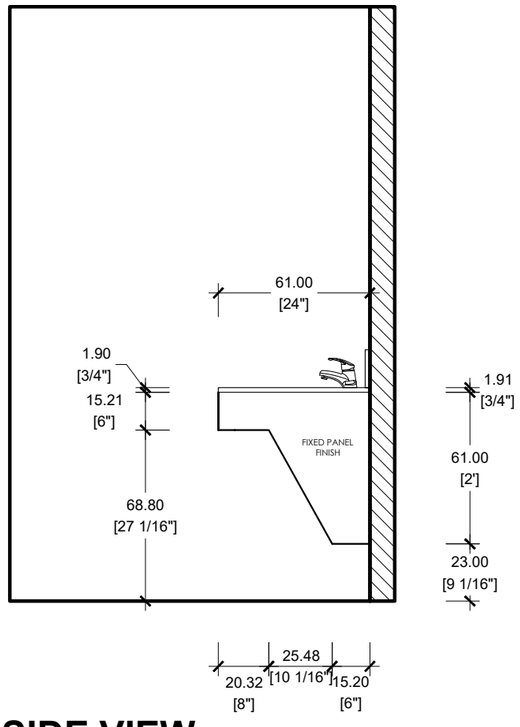


**SIDE VIEW** SCALE 1/2"=1'-0"
CASA FAMILIA / VANITY TYPE V2

ITALIAN KITCHEN AND BATH
kitchen | bath | tile | closet
1777 NW 72TH AVE. MIAMI FL, 33126
T. 305.599.9000 F. 305.599.9870

PROJECT #: 23-033
CASA FAMILIA
KITCHEN | VANITIES

DATE: 11/05/2024
REV: 5.0
DIMENSION: CM | INCHES
DRAWN BY: A.C

SHEET NUMBER
A.6

# KITCHEN TYPE K1.1
## UNIT A3

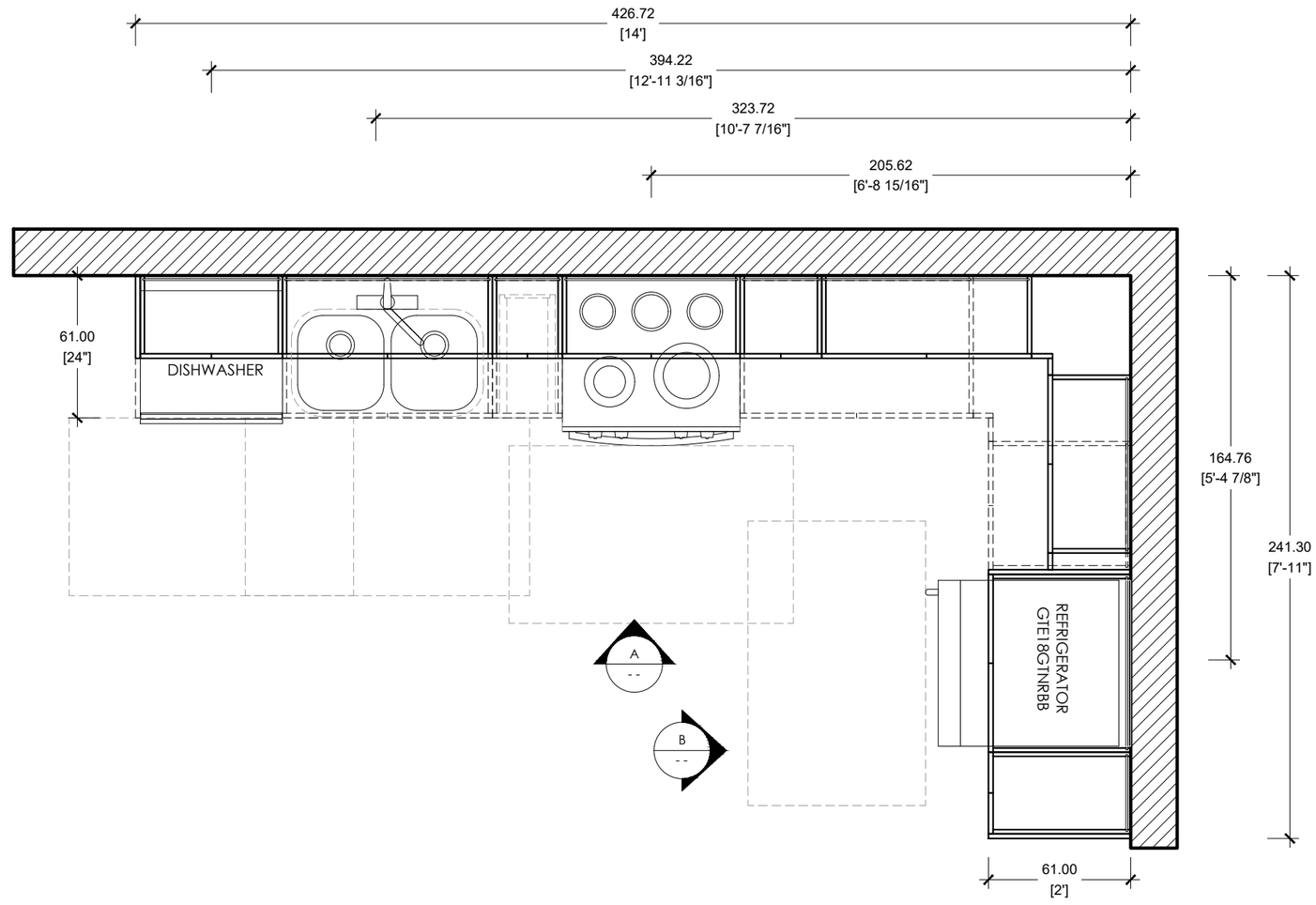


**FLOOR PLAN** SCALE 1/2"=1'-0"

CASA FAMILIA UNIT A3/ KITCHEN TYPE K1

ITALIAN KITCHEN AND BATH

kitchen | bath | tile | closet

1777 NW 72TH AVE. MIAMI FL, 33126

T. 305.599.9000 F. 305.599.9870

PROJECT #: 23-033

CASA FAMILIA

KITCHEN | VANITIES

DATE: 11/05/2024

REV: 5.0

DIMENSION: CM | INCHES

DRAWN BY: A.C

SHEET NUMBER

A.7

# KITCHEN TYPE K1.1
## UNIT A3

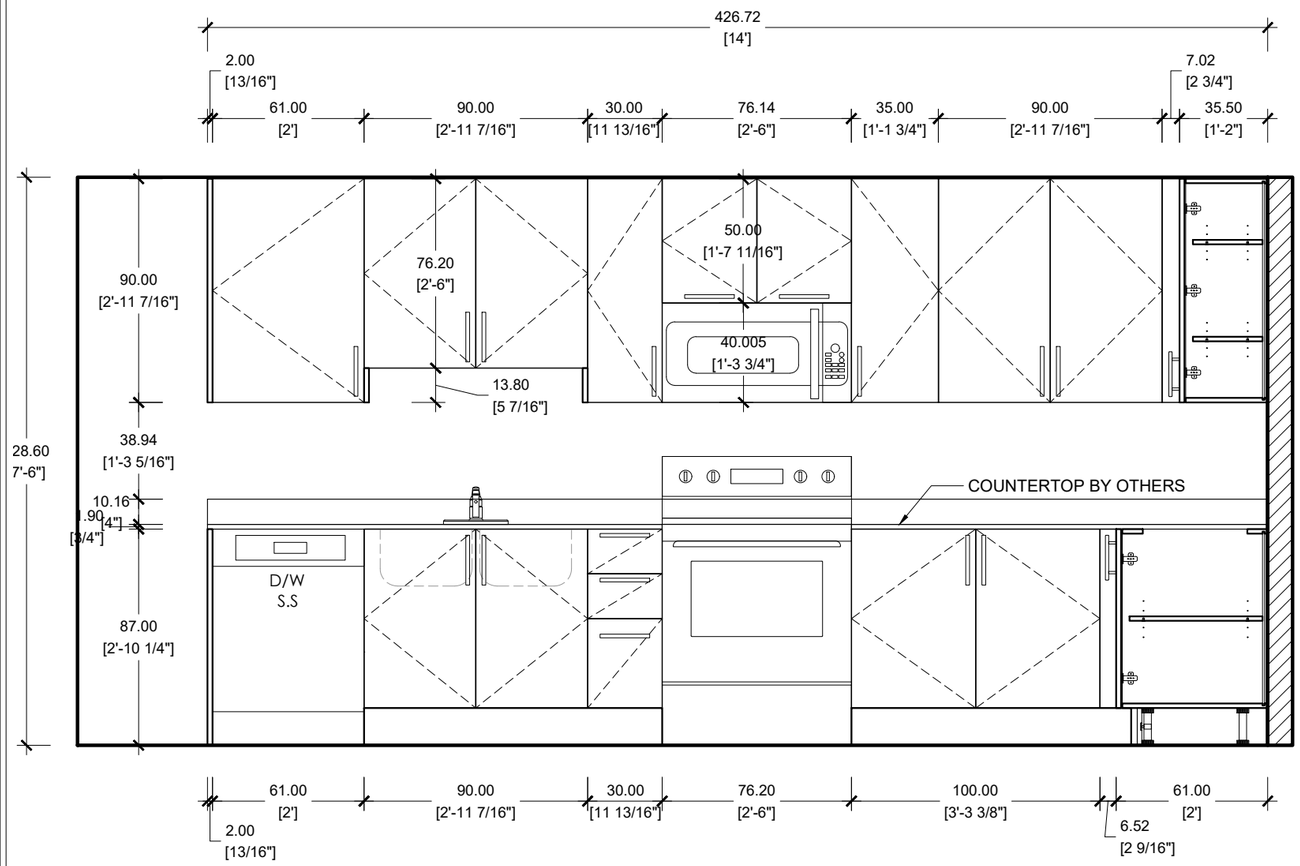


## ELEVATION A
CASA FAMILIA UNIT A3 / KITCHEN TYPE K1

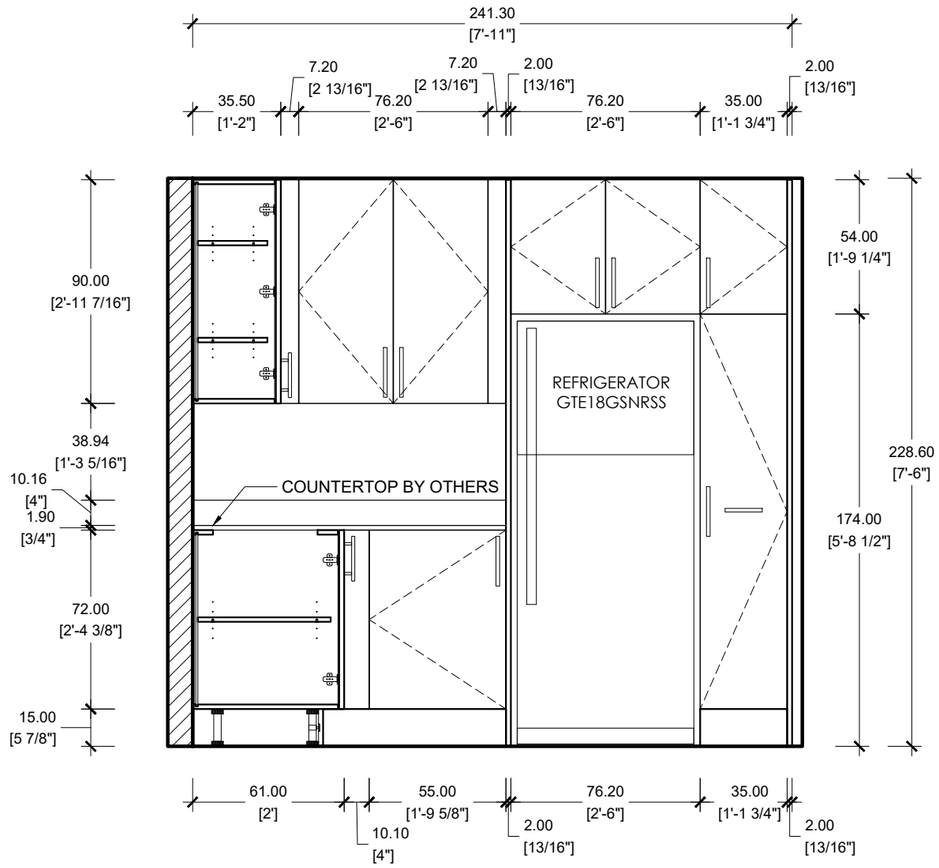


## ELEVATION B
CASA FAMILIA UNIT A3 / KITCHEN TYPE K1


ITALIAN KITCHEN AND BATH
kitchen | bath | tile | closet
1777 NW 72TH AVE. MIAMI FL, 33126
T. 305.599.9000 F. 305.599.9870


PROJECT #: 23-033
CASA FAMILIA
KITCHEN | VANITIES

DATE: 11/05/2024
REV: 5.0
DIMENSION: CM | INCHES
DRAWN BY: A.C

SHEET NUMBER
A.8

# VANITY TYPE V3
## UNIT A3

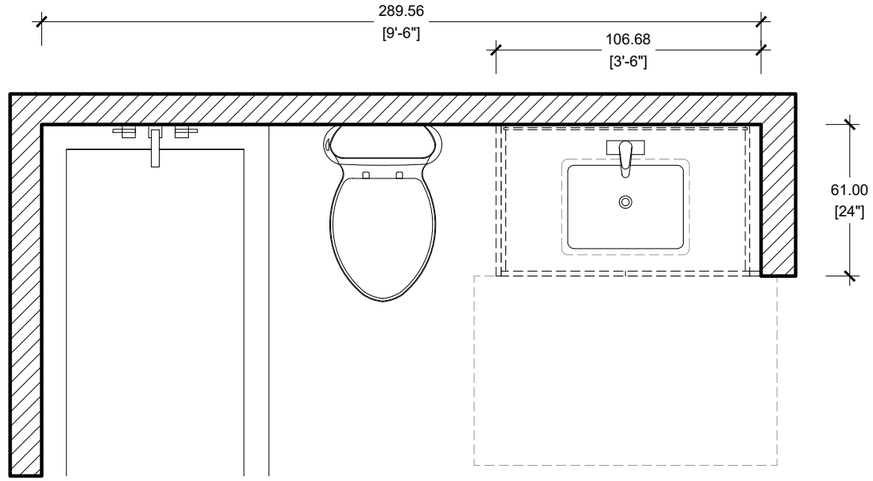


**FLOOR PLAN** SCALE 1/2"=1'-0"
CASA FAMILIA /VANITY TYPE V3

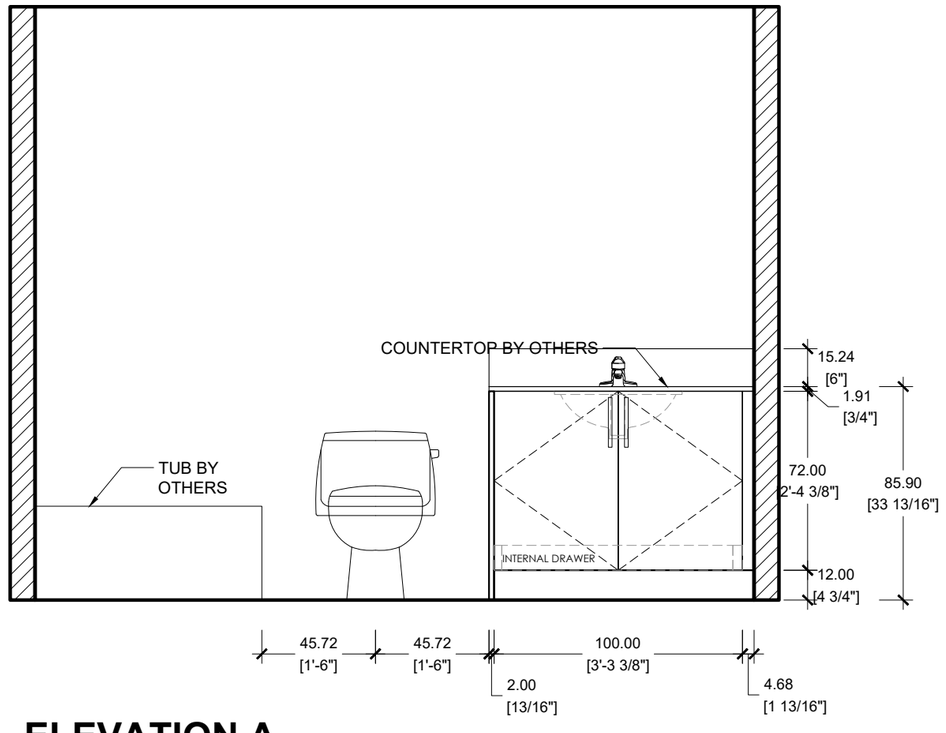


**ELEVATION A**
CASA FAMILIA UNIT A3 / VANITY TYPE V3


ITALIAN KITCHEN AND BATH
kitchen | bath | tile | closet
1777 NW 72TH AVE. MIAMI FL, 33126
T. 305.599.9000 F. 305.599.9870


PROJECT #: 23-033
CASA FAMILIA
KITCHEN | VANITIES

DATE: 11/05/2024
REV: 5.0
DIMENSION: CM| INCHES
DRAWN BY: A.C

SHEET NUMBER
A.9

# KITCHEN TYPE K3
## UNIT B1

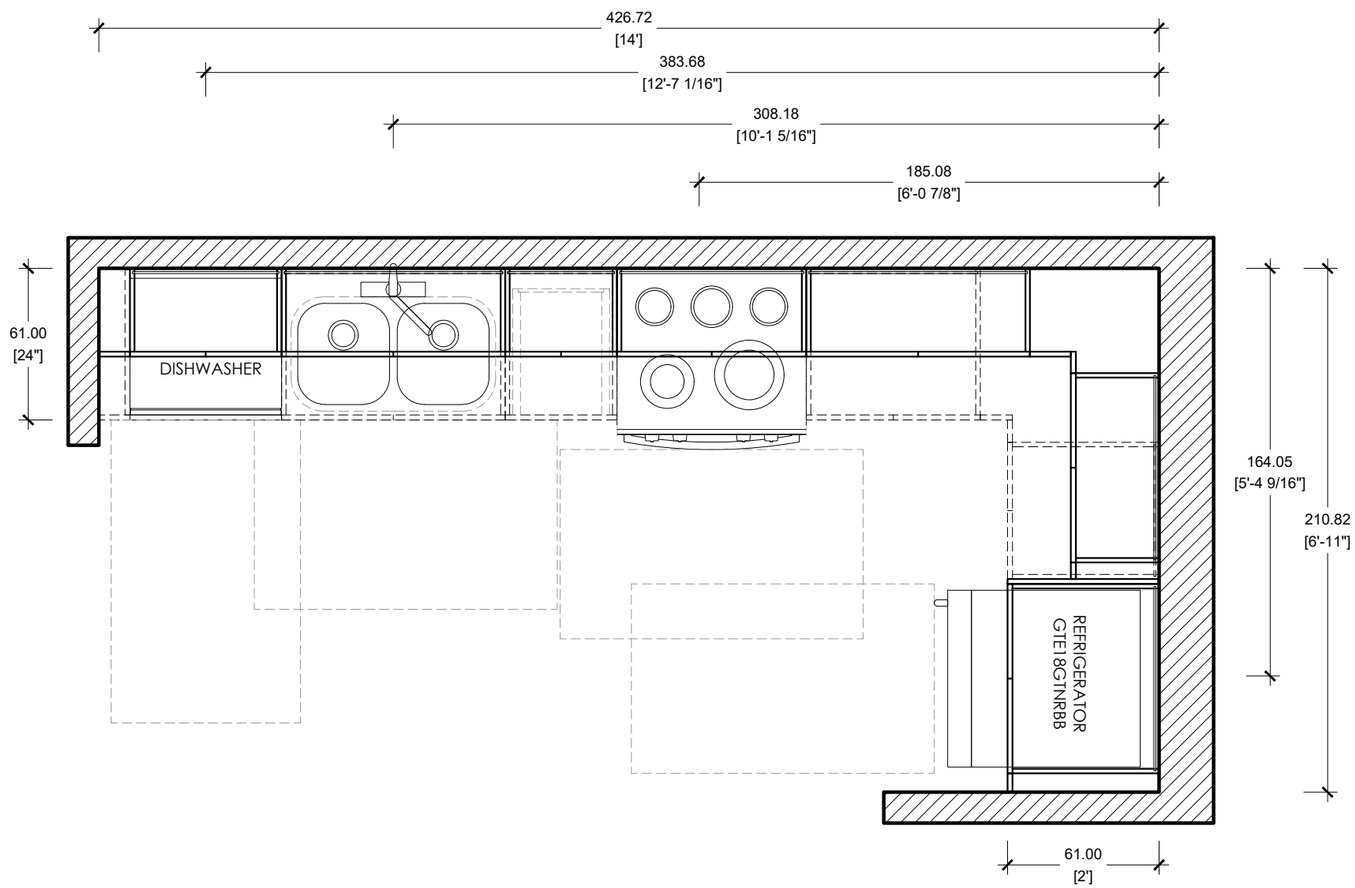


**FLOOR PLAN** SCALE 1/2"=1'-0"

CASA FAMILIA UNIT B1/ KITCHEN TYPE K3


ITALIAN KITCHEN AND BATH
kitchen | bath | tile | closet
1777 NW 72TH AVE. MIAMI FL, 33126
T. 305.599.9000 F. 305.599.9870


PROJECT #: 23-033
CASA FAMILIA
KITCHEN | VANITIES

DATE: 11/05/2024
REV: 5.0
DIMENSION: CM | INCHES
DRAWN BY: A.C

SHEET NUMBER
A.10

# KITCHEN TYPE K3
## UNIT B1

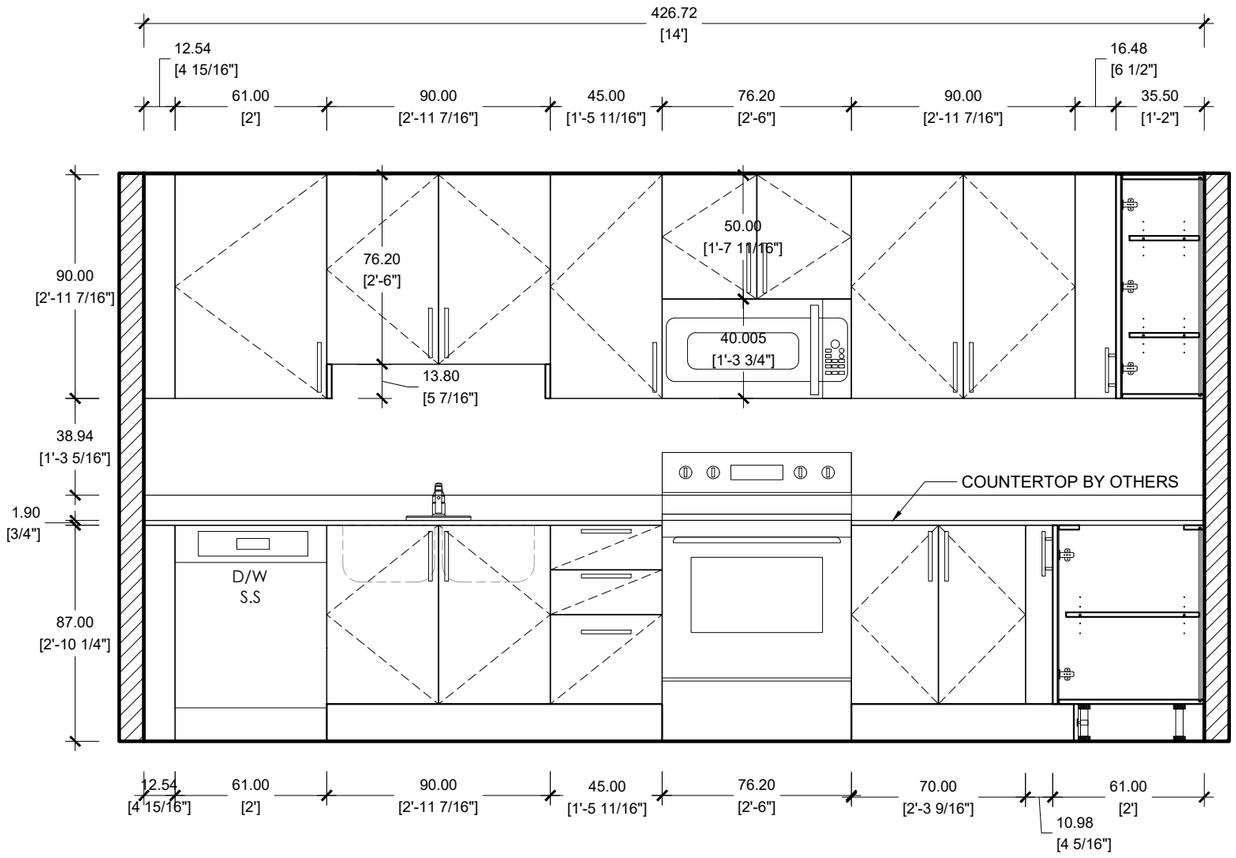


## ELEVATION A
CASA FAMILIA UNIT B1 / KITCHEN TYPE K3

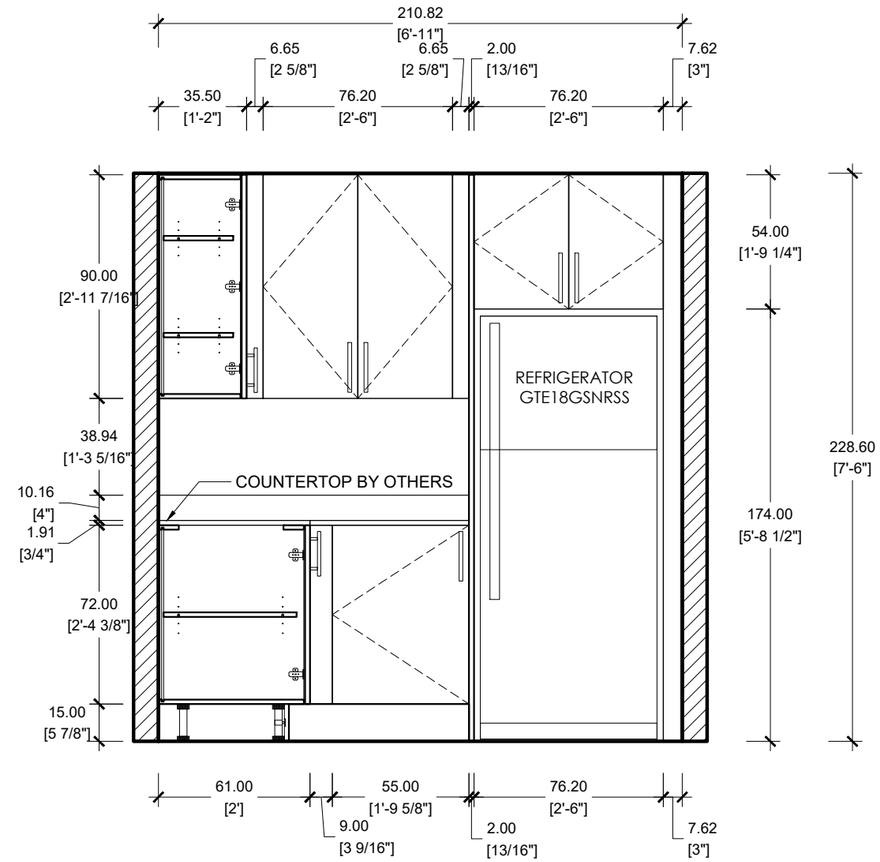


## ELEVATION B
CASA FAMILIA UNIT B1 / KITCHEN TYPE K3


ITALIAN KITCHEN AND BATH
kitchen | bath | tile | closet
1777 NW 72TH AVE. MIAMI FL, 33126
T. 305.599.9000 F. 305.599.9870


PROJECT #: 23-033
CASA FAMILIA
KITCHEN | VANITIES

DATE: 11/05/2024
REV: 5.0
DIMENSION: CM | INCHES
DRAWN BY: A.C

SHEET NUMBER
A.11

# VANITIES
UNIT B1

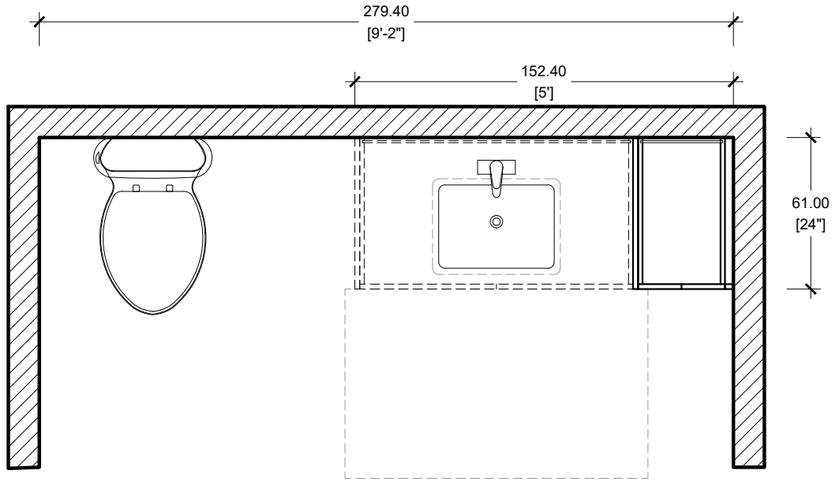


## FLOOR PLAN SCALE 1/2"=1'-0"
CASA FAMILIA UNIT B1 /VANITY TYPE V1

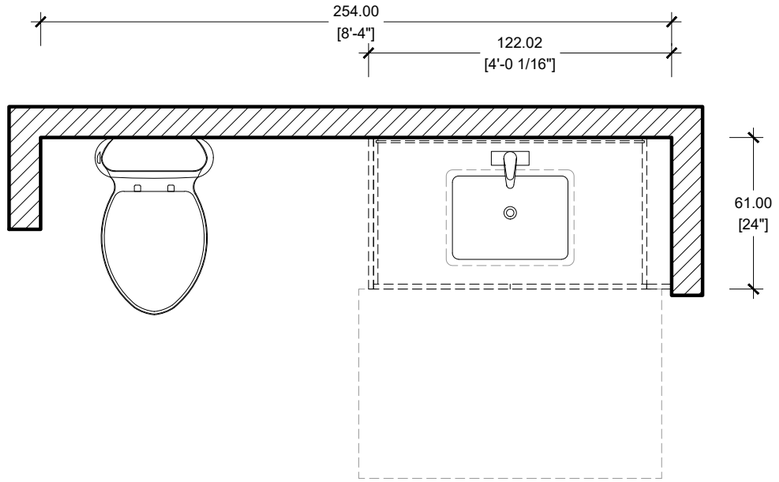


## FLOOR PLAN SCALE 1/2"=1'-0"
CASA FAMILIA /VANITY TYPE V4

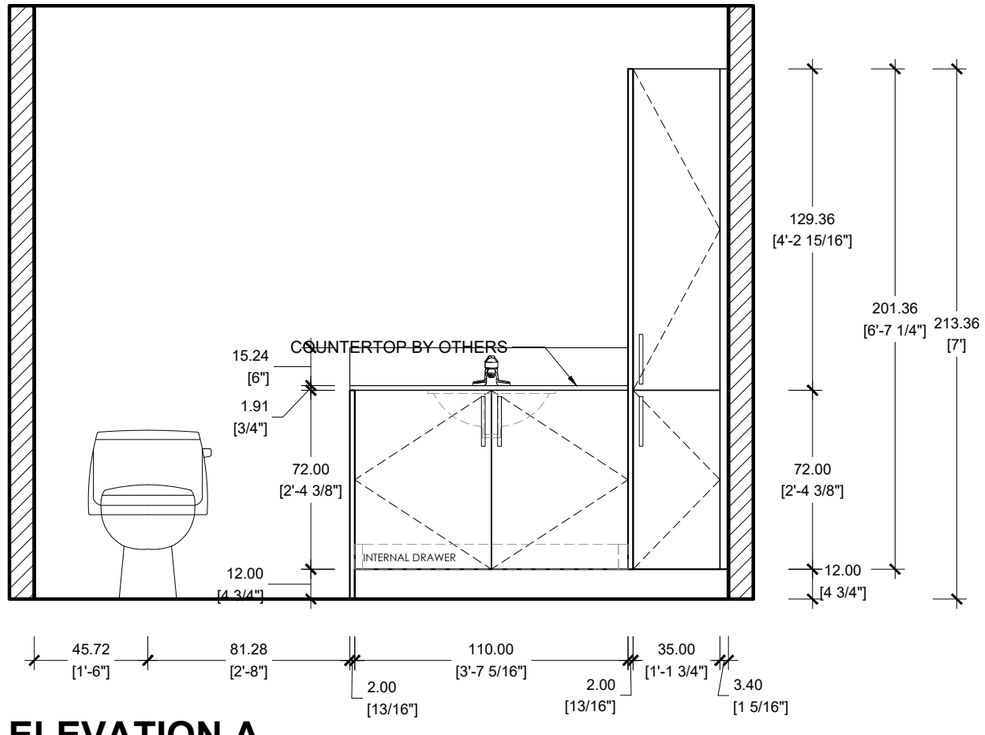


## ELEVATION A
CASA FAMILIA UNIT B1 / VANITY TYPE V1

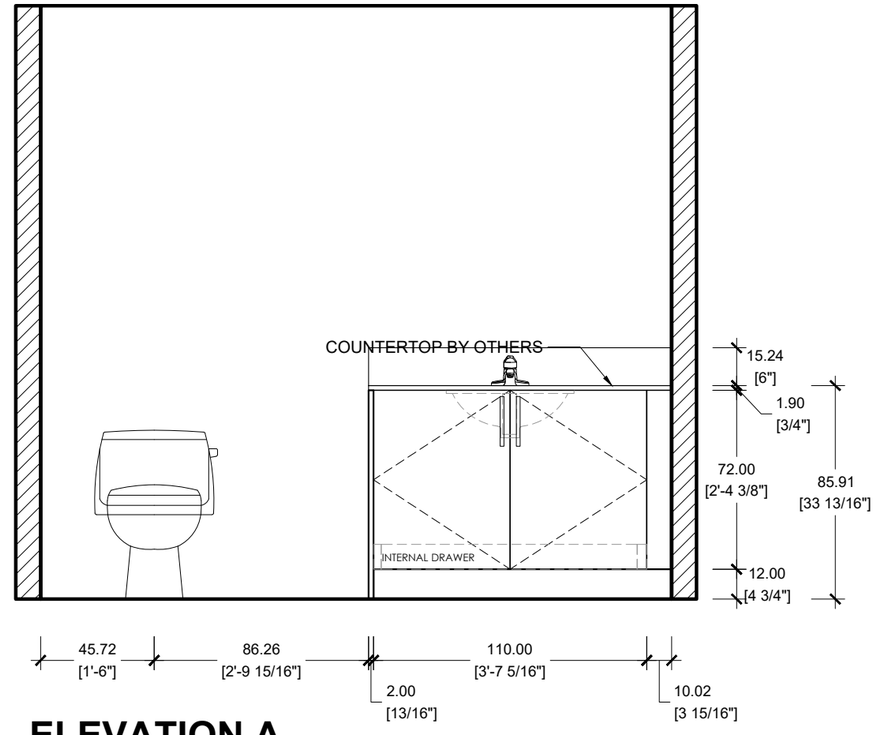


## ELEVATION A
CASA FAMILIA UNIT B1 / VANITY TYPE V4

ITALIAN KITCHEN AND BATH
kitchen | bath | tile | closet
1777 NW 72TH AVE. MIAMI FL, 33126
T. 305.599.9000 F. 305.599.9870

PROJECT #: 23-033
CASA FAMILIA
KITCHEN | VANITIES

DATE: 11/05/2024
REV: 5.0
DIMENSION: CM | INCHES
DRAWN BY: A.C

SHEET NUMBER
A.12

# KITCHEN TYPE K4
## UNIT B2FA

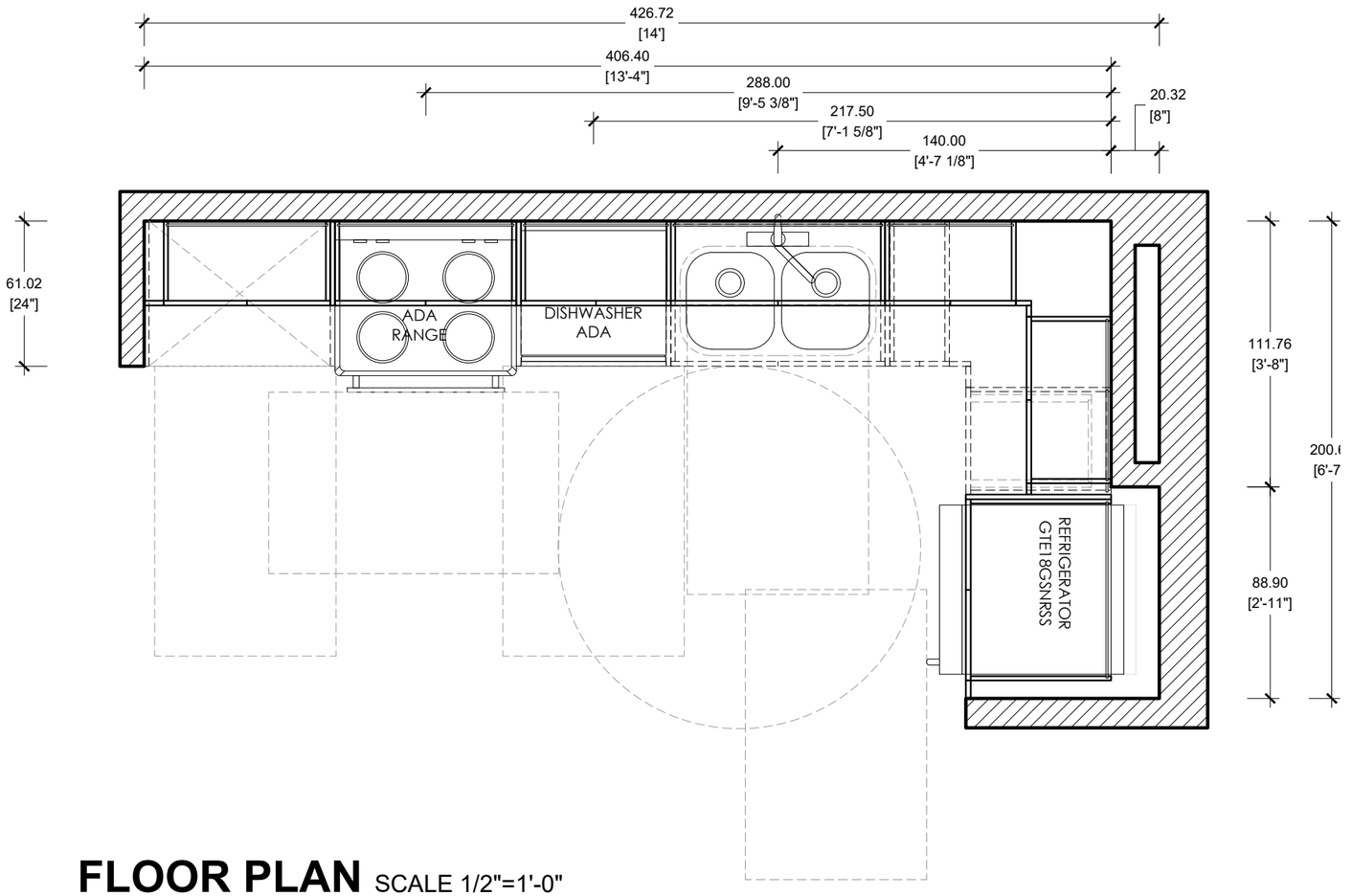


**FLOOR PLAN** SCALE 1/2"=1'-0"

CASA FAMILIA / KITCHEN TYPE K4 ADA


ITALIAN KITCHEN AND BATH
kitchen | bath | tile | closet
1777 NW 72TH AVE. MIAMI FL, 33126
T. 305.599.9000 F. 305.599.9870


PROJECT #: 23-033
CASA FAMILIA
KITCHEN | VANITIES

DATE: 11/05/2024
REV: 5.0
DIMENSION: CM | INCHES
DRAWN BY: A.C

SHEET NUMBER
A.13

# KITCHEN TYPE K4
## UNIT B2FA

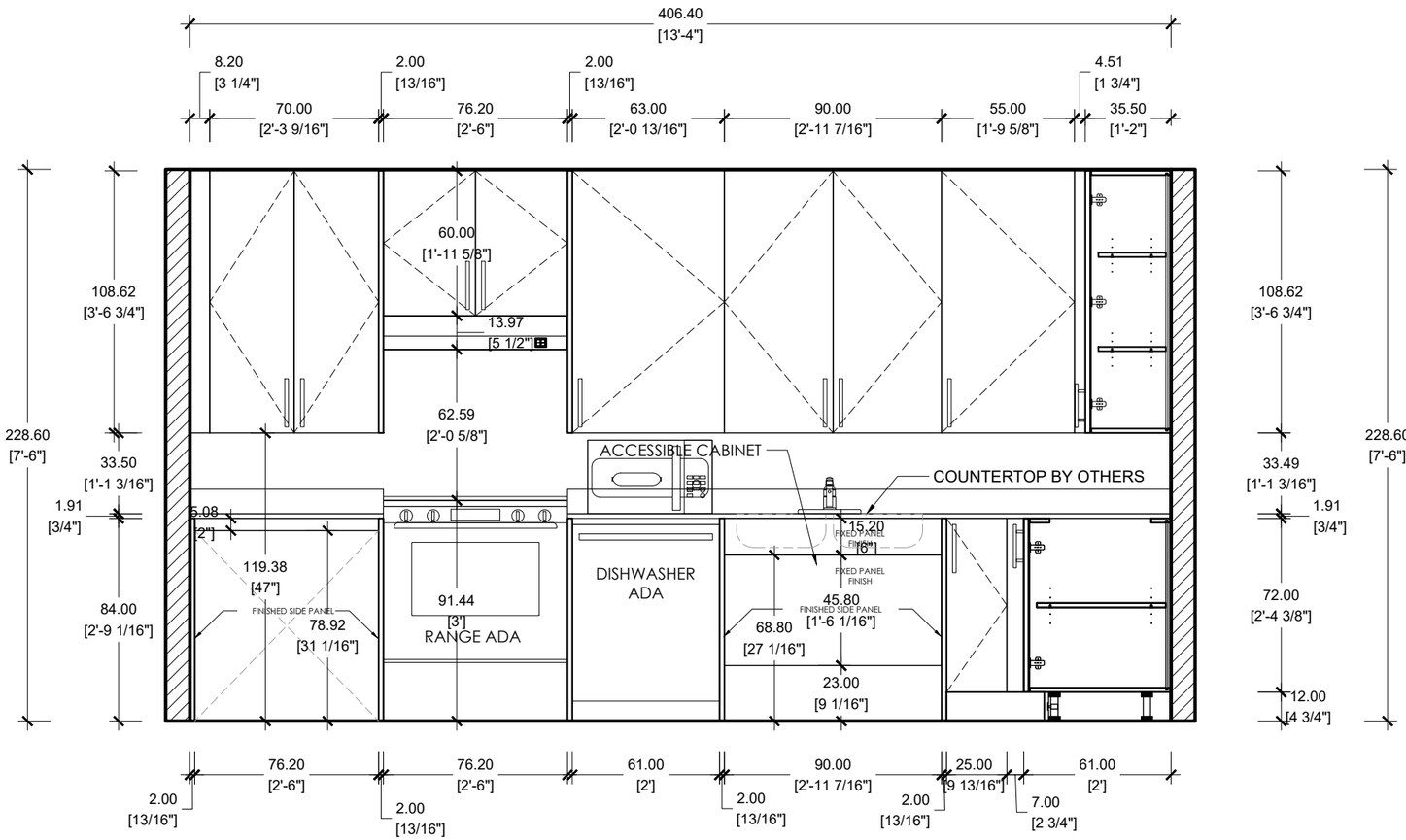


## ELEVATION A
CASA FAMILIA UNIT B1 FA / KITCHEN TYPE K4 ADA

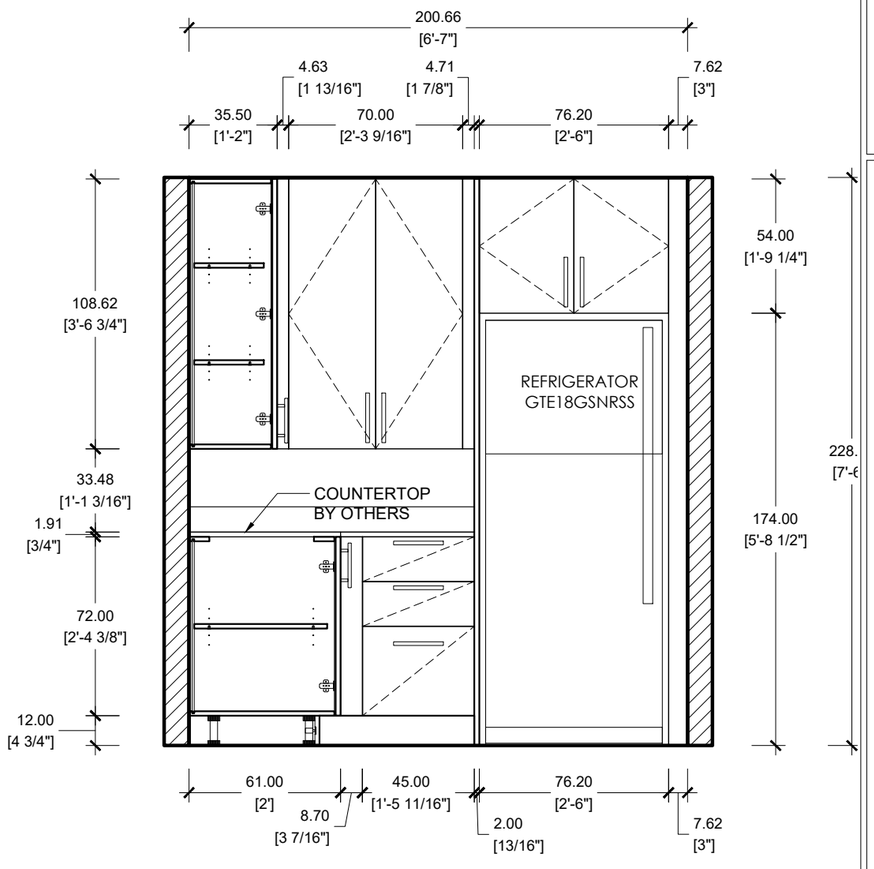


## ELEVATION B
CASA FAMILIA UNIT B1 FA / KITCHEN TYPE K4 ADA


ITALIAN KITCHEN AND BATH
kitchen | bath | tile | closet
1777 NW 72TH AVE. MIAMI FL, 33126
T. 305.599.9000 F. 305.599.9870


PROJECT #: 23-033
CASA FAMILIA
KITCHEN | VANITIES

DATE: 11/05/2024
REV: 5.0
DIMENSION: CM | INCHES
DRAWN BY: A.C

SHEET NUMBER
A.14

# VANITY TYPE RV2
UNIT B2FA

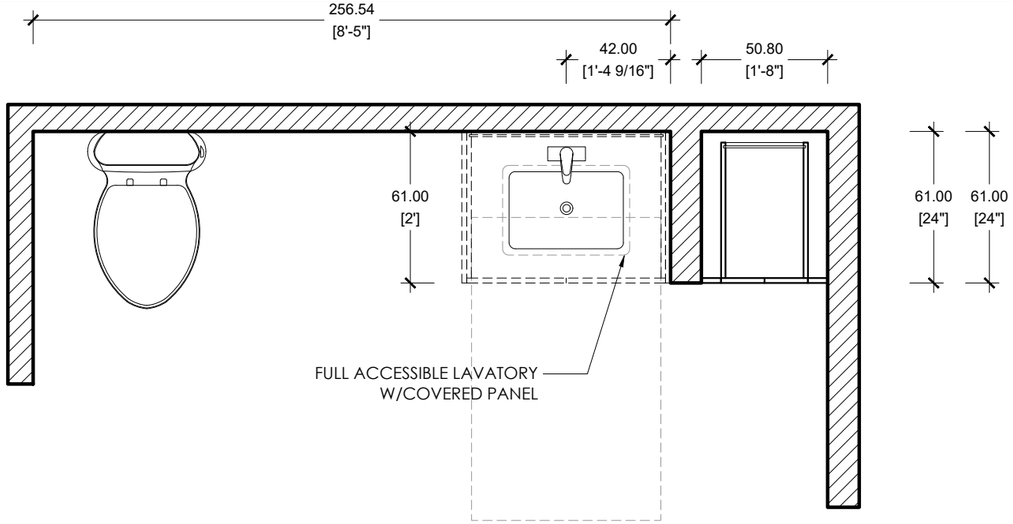


## FLOOR PLAN SCALE 1/2"=1'-0"
CASA FAMILIA /VANITY TYPE RV2

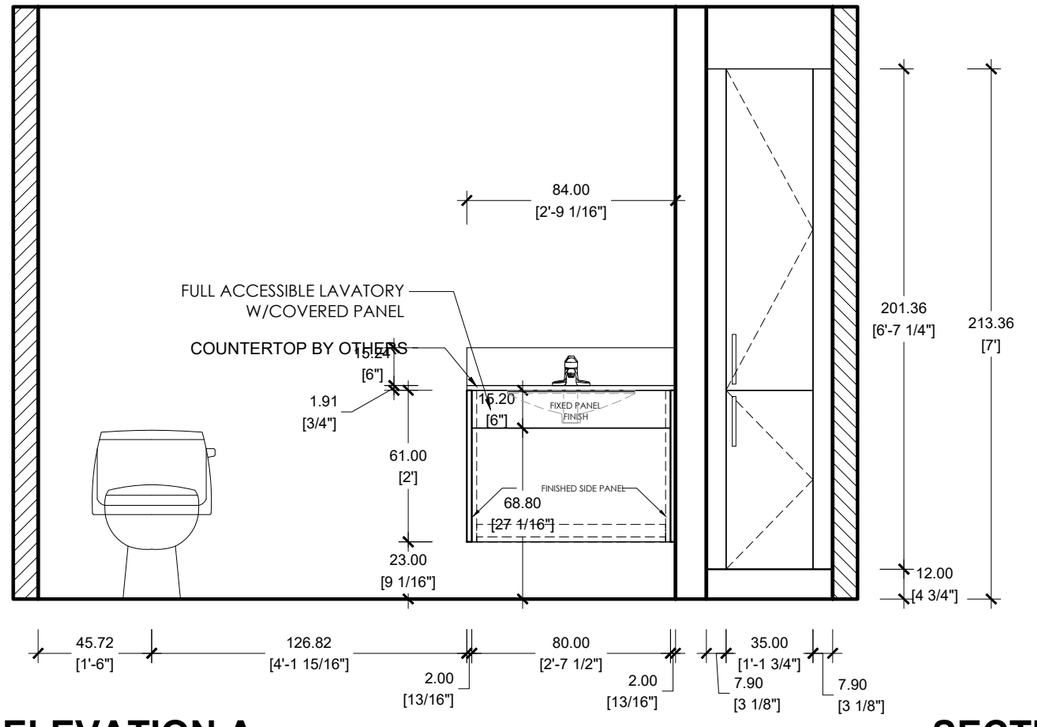


## ELEVATION A
CASA FAMILIA / VANITY TYPE RV2

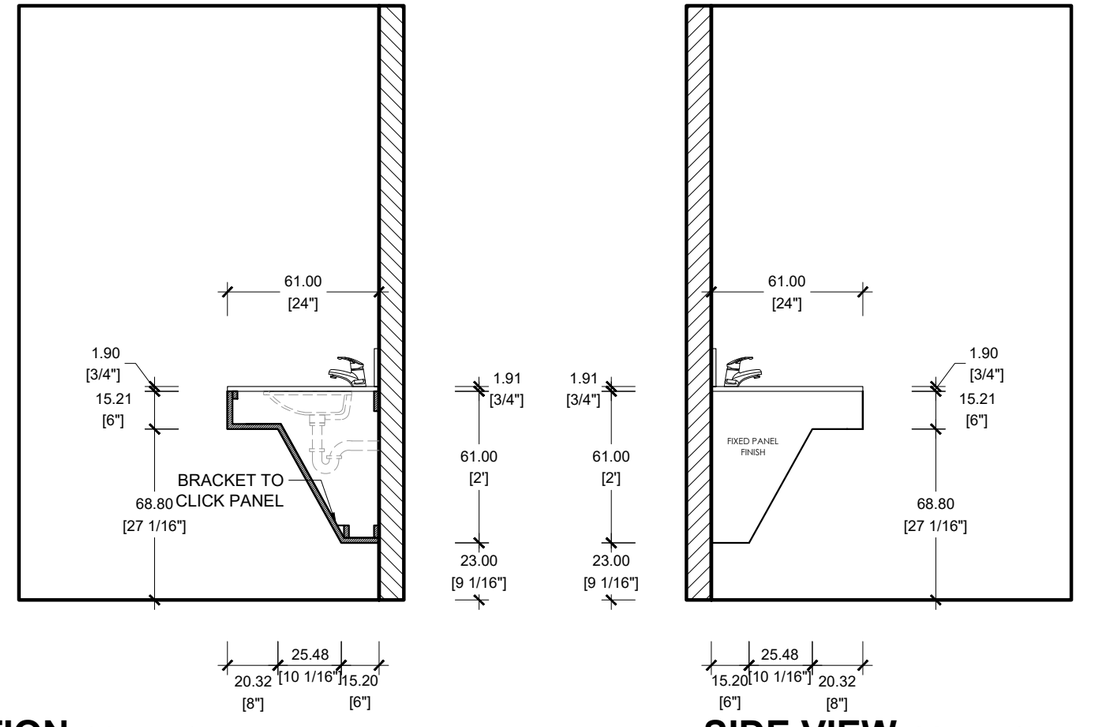


## SECTION SCALE 1/2"=1'-0"
CASA FAMILIA / VANITY TYPE RV2




## SIDE VIEW SCALE 1/2"=1'-0"
CASA FAMILIA / VANITY TYPE RV2

ITALIAN KITCHEN AND BATH
kitchen | bath | tile | closet
1777 NW 72TH AVE. MIAMI FL, 33126
T. 305.599.9000 F. 305.599.9870

PROJECT #: 23-033
CASA FAMILIA
KITCHEN | VANITIES

DATE: 11/05/2024
REV: 5.0
DIMENSION: CM | INCHES
DRAWN BY: A.C

SHEET NUMBER
A.15

# VANITY TYPE RV2
UNIT B2FA

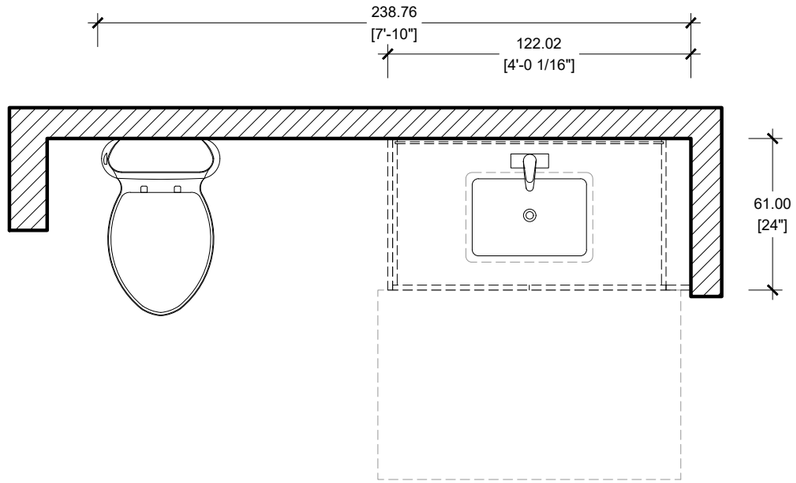


## FLOOR PLAN SCALE 1/2"=1'-0"
CASA FAMILIA /VANITY TYPE V4

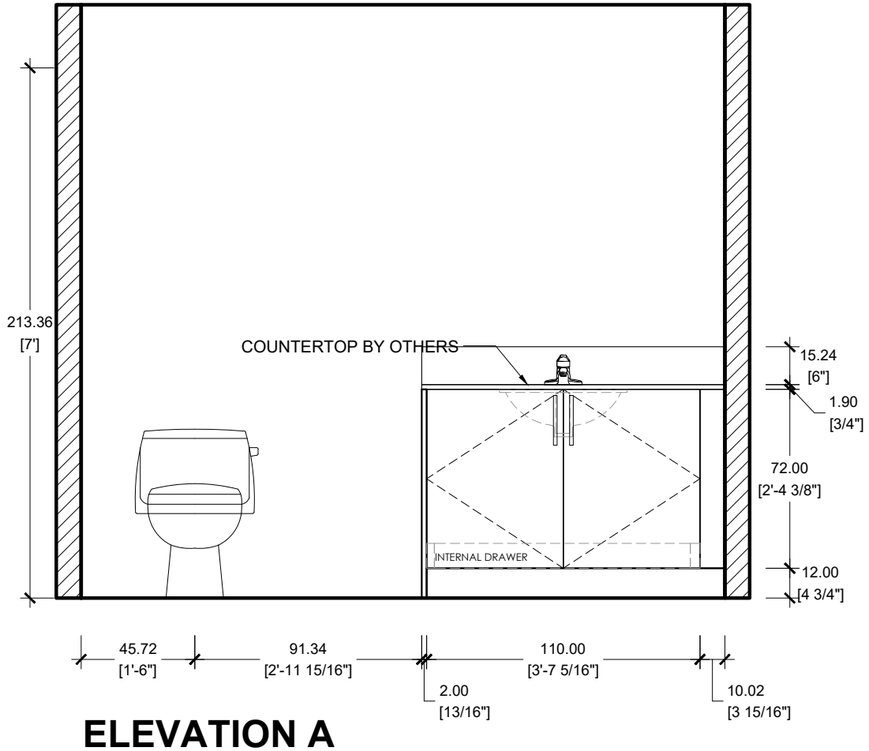


## ELEVATION A
CASA FAMILIA UNIT B1 / VANITY TYPE V4


ITALIAN KITCHEN AND BATH
kitchen | bath | tile | closet
1777 NW 72TH AVE. MIAMI FL, 33126
T. 305.599.9000 F. 305.599.9870


PROJECT #: 23-033
CASA FAMILIA
KITCHEN | VANITIES

DATE: 11/05/2024
REV: 5.0
DIMENSION: CM | INCHES
DRAWN BY: A.C

SHEET NUMBER
A.16

# SECTION

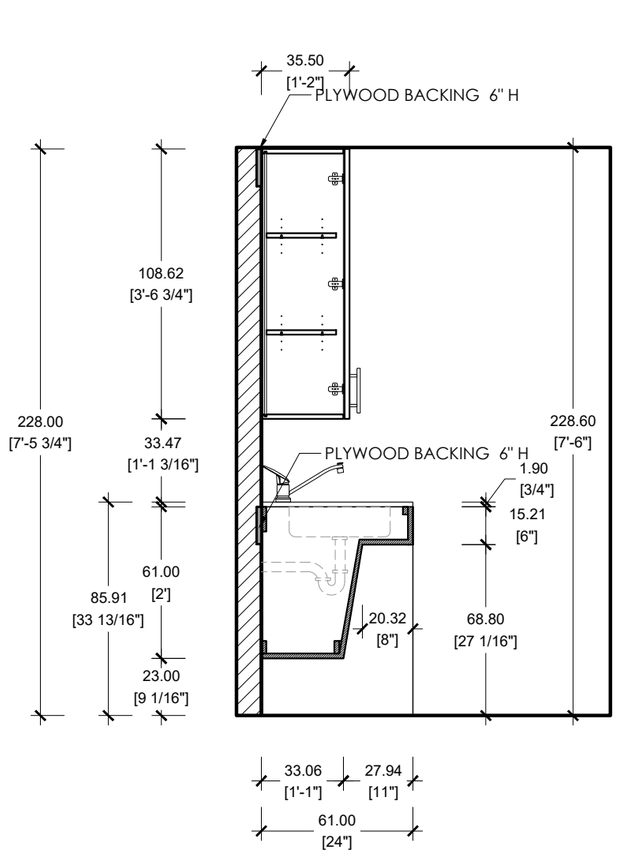


**SECTION** SCALE 1/2"=1'-0"
KITCHEN ADA

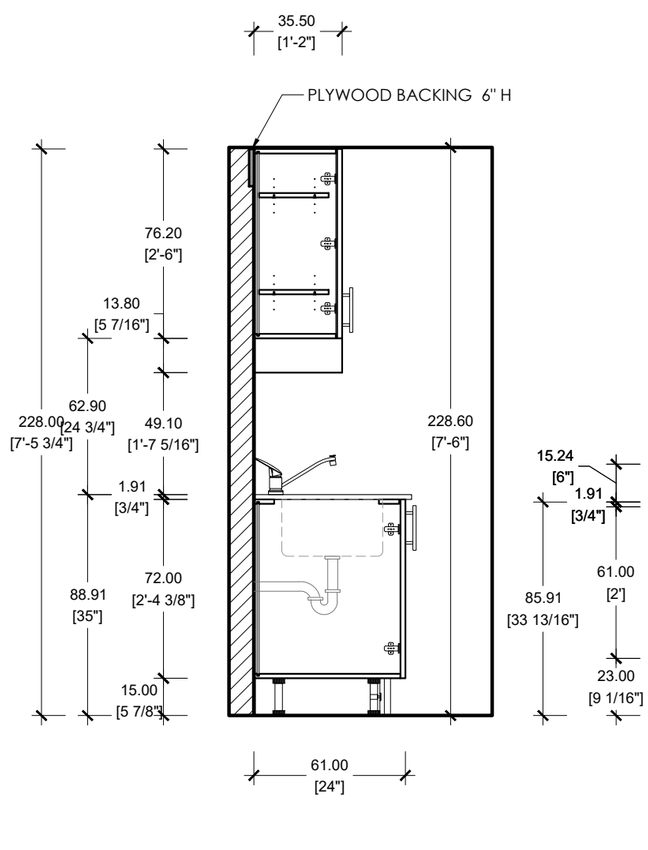


**SECTION** SCALE 1/2"=1'-0"
KITCHEN

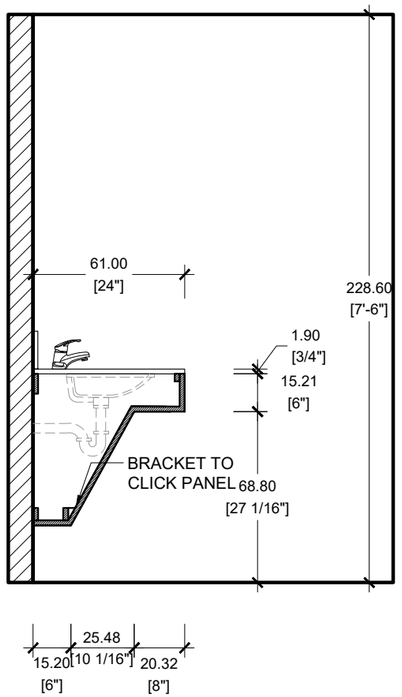


**SECTION** SCALE 1/2"=1'-0"
VANITY ADA

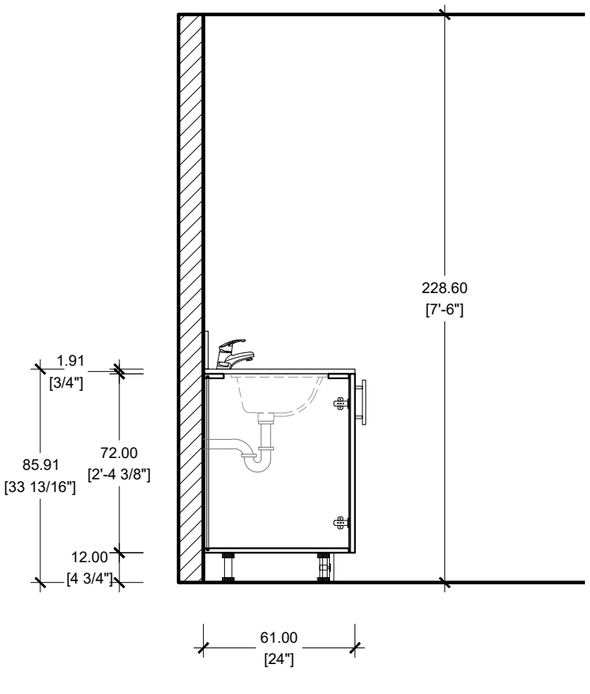


**SECTION** SCALE 1/2"=1'-0"
VANITY


ITALIAN KITCHEN AND BATH
kitchen | bath | tile | closet
1777 NW 72TH AVE. MIAMI FL, 33126
T. 305.599.9000 F. 305.599.9870


PROJECT #: 23-033
CASA FAMILIA
KITCHEN | VANITIES

DATE: 11/05/2024
REV: 5.0
DIMENSION: CM | INCHES
DRAWN BY: A.C

SHEET NUMBER
A.17

# SECTION

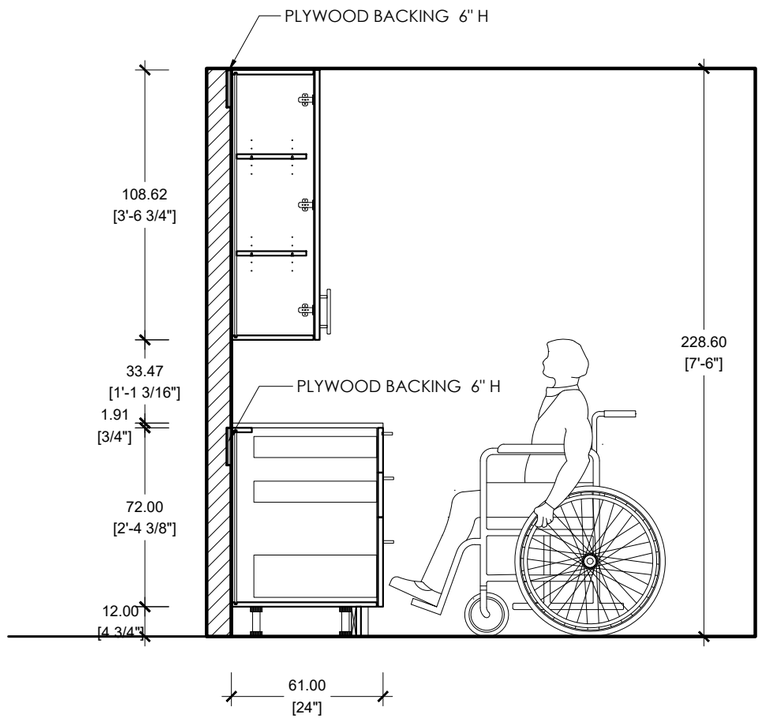


**SECTION** SCALE 1/2"=1'-0"
KITCHEN ADA DRAWER

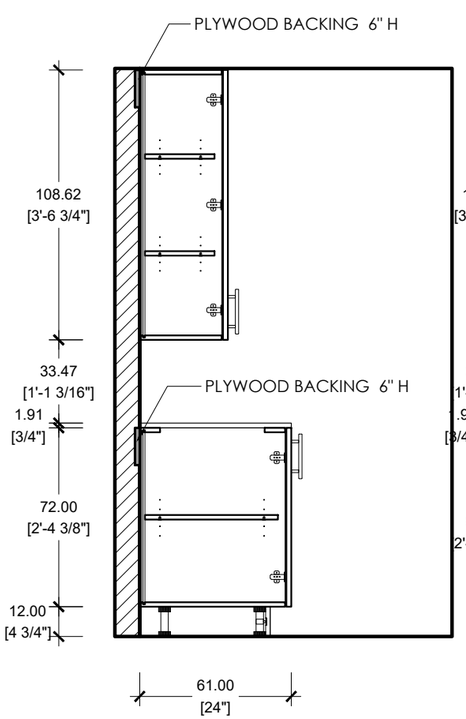


**SECTION** SCALE 1/2"=1'-0"
KITCHEN ADA

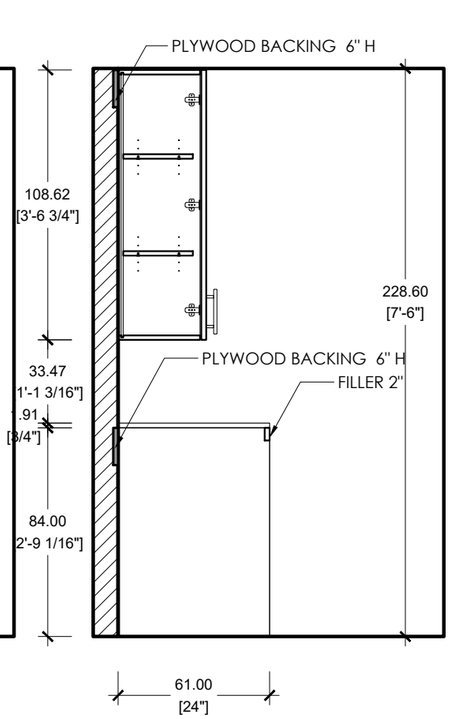


**SECTION** SCALE 1/2"=1'-0"
KITCHEN ADA

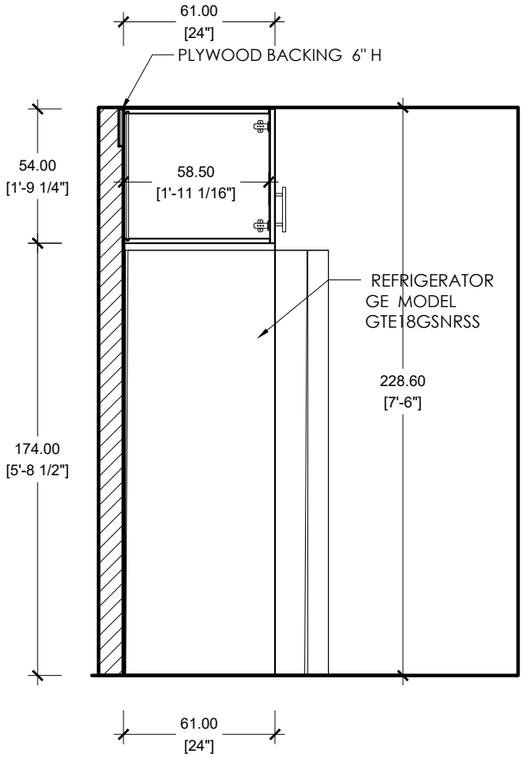


**SECTION REFRIGERATOR**
SCALE 1/2"=1'-0"
KITCHEN

ITALIAN KITCHEN AND BATH
kitchen | bath | tile | closet
1777 NW 72TH AVE. MIAMI FL, 33126
T. 305.599.9000 F. 305.599.9870

PROJECT #: 23-033
CASA FAMILIA
KITCHEN | VANITIES

DATE: 11/05/2024
REV: 5.0
DIMENSION: CM| INCHES
DRAWN BY: A.C

SHEET NUMBER
A.18

# SECTION

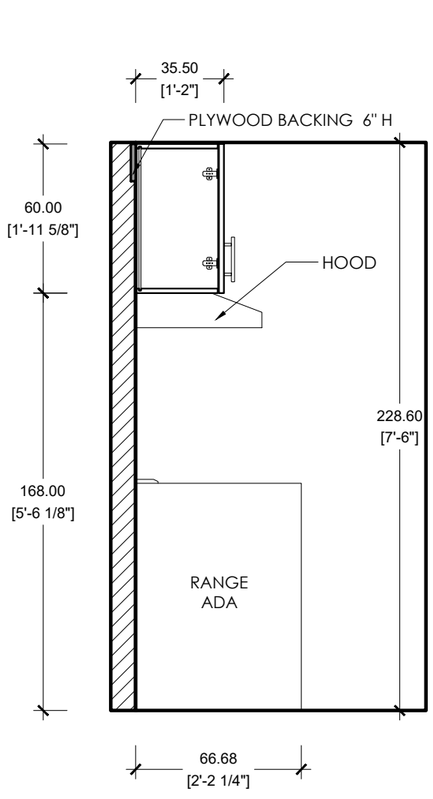


**SECTION HOOD** SCALE 1/2"=1'-0"
KITCHEN ADA

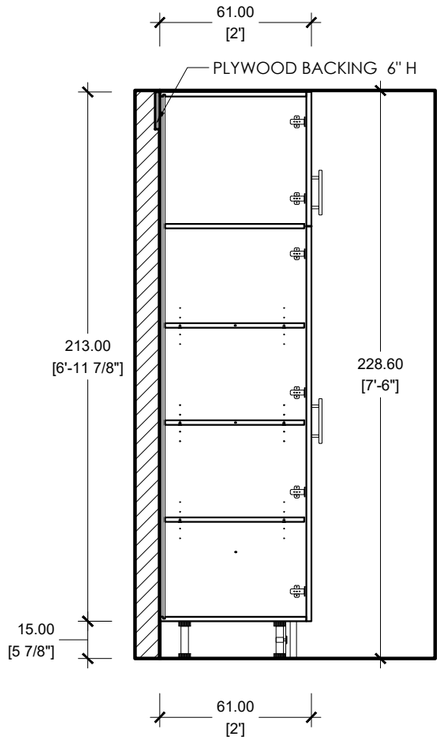


**SECTION** SCALE 1/2"=1'-0"
KITCHEN PANTRY

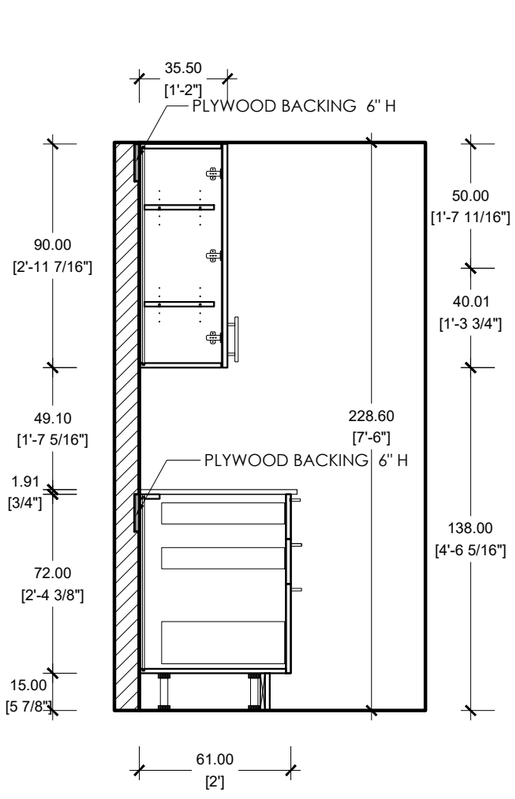


**SECTION** SCALE 1/2"=1'-0"
KITCHEN DRAWER

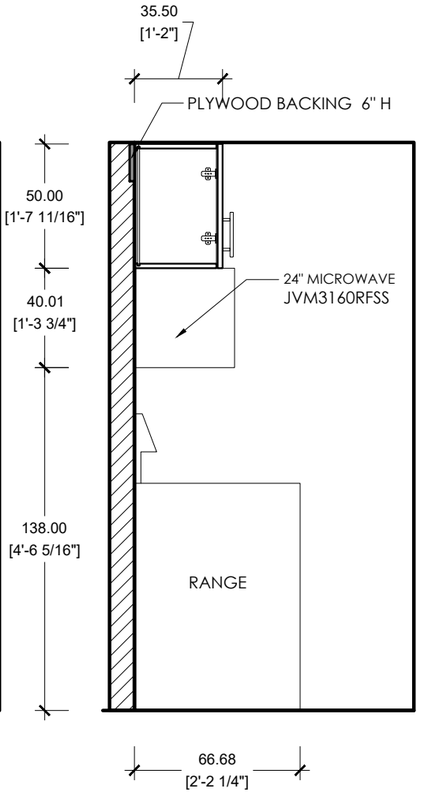


**SECTION**
**MICROWAVE** SCALE 1/2"=1'-0"
KITCHEN

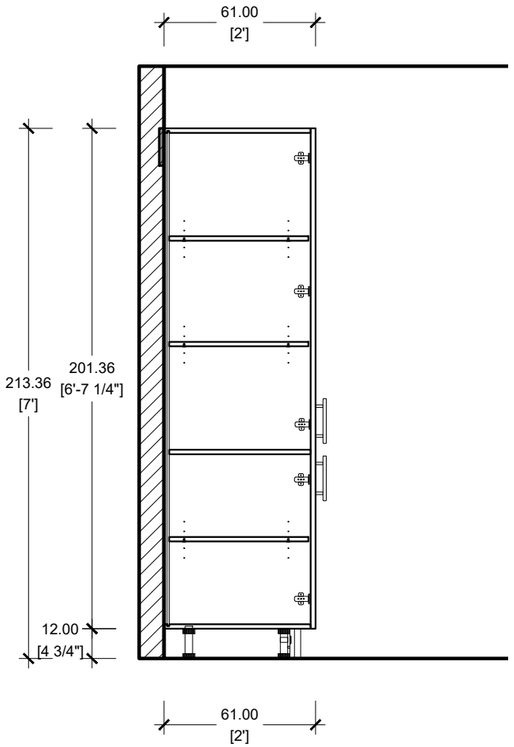


**SECTION** SCALE 1/2"=1'-0"
VANITY PANTRY


ITALIAN KITCHEN AND BATH
kitchen | bath | tile | closet
1777 NW 72TH AVE. MIAMI FL, 33126
T. 305.599.9000 F. 305.599.9870


PROJECT #: 23-033
CASA FAMILIA
KITCHEN | VANITIES

DATE: 11/05/2024
REV: 5.0
DIMENSION: CM | INCHES
DRAWN BY: A.C

SHEET NUMBER
A.19

# KITCHEN

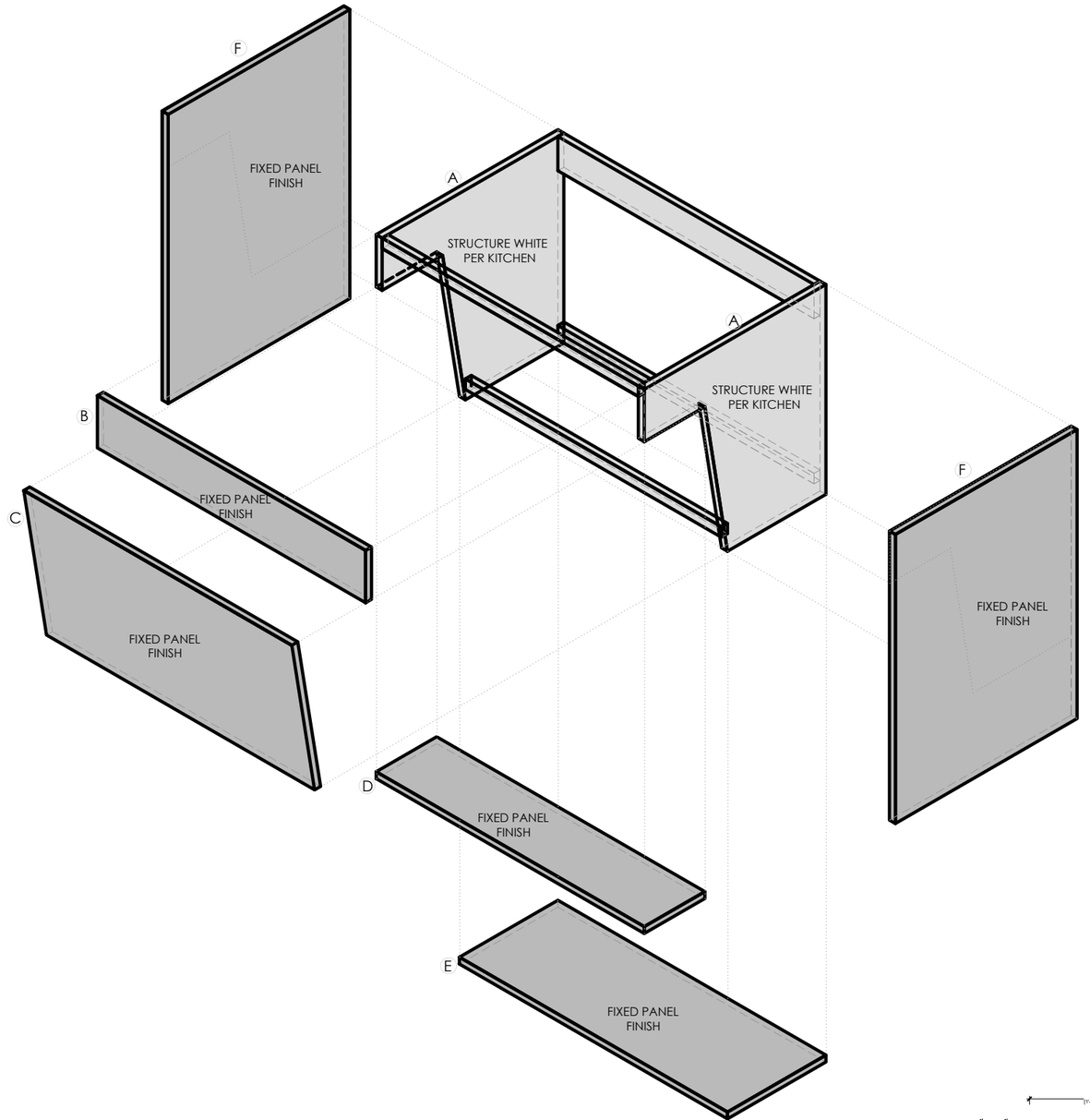


**PARTS BY KITCHEN** SCALE 1/2"=1'-0"
KITCHEN ADA SINK

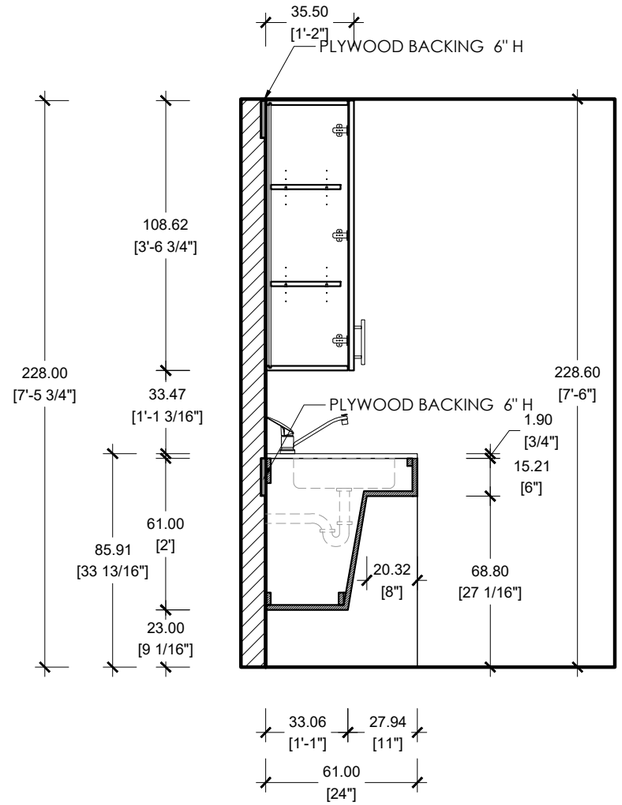


**SECTION** SCALE 1/2"=1'-0"
KITCHEN ADA

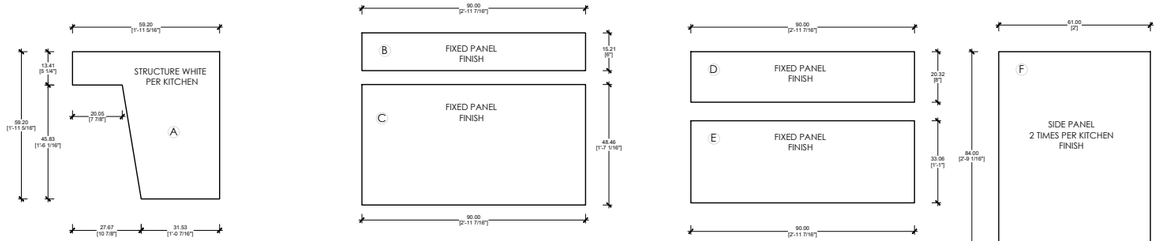


**PARTS BY KITCHEN** SCALE 1/2"=1'-0"
KITCHEN | BASE 90 CM

ITALIAN KITCHEN AND BATH
kitchen | bath | tile | closet
1777 NW 72TH AVE. MIAMI FL, 33126
T. 305.599.9000 F. 305.599.9870

PROJECT #: 23-033
CASA FAMILIA
KITCHEN | VANITIES

DATE: 11/05/2024
REV: 5.0
DIMENSION: CM | INCHES
DRAWN BY: A.C

SHEET NUMBER
A.20

# VANITIES

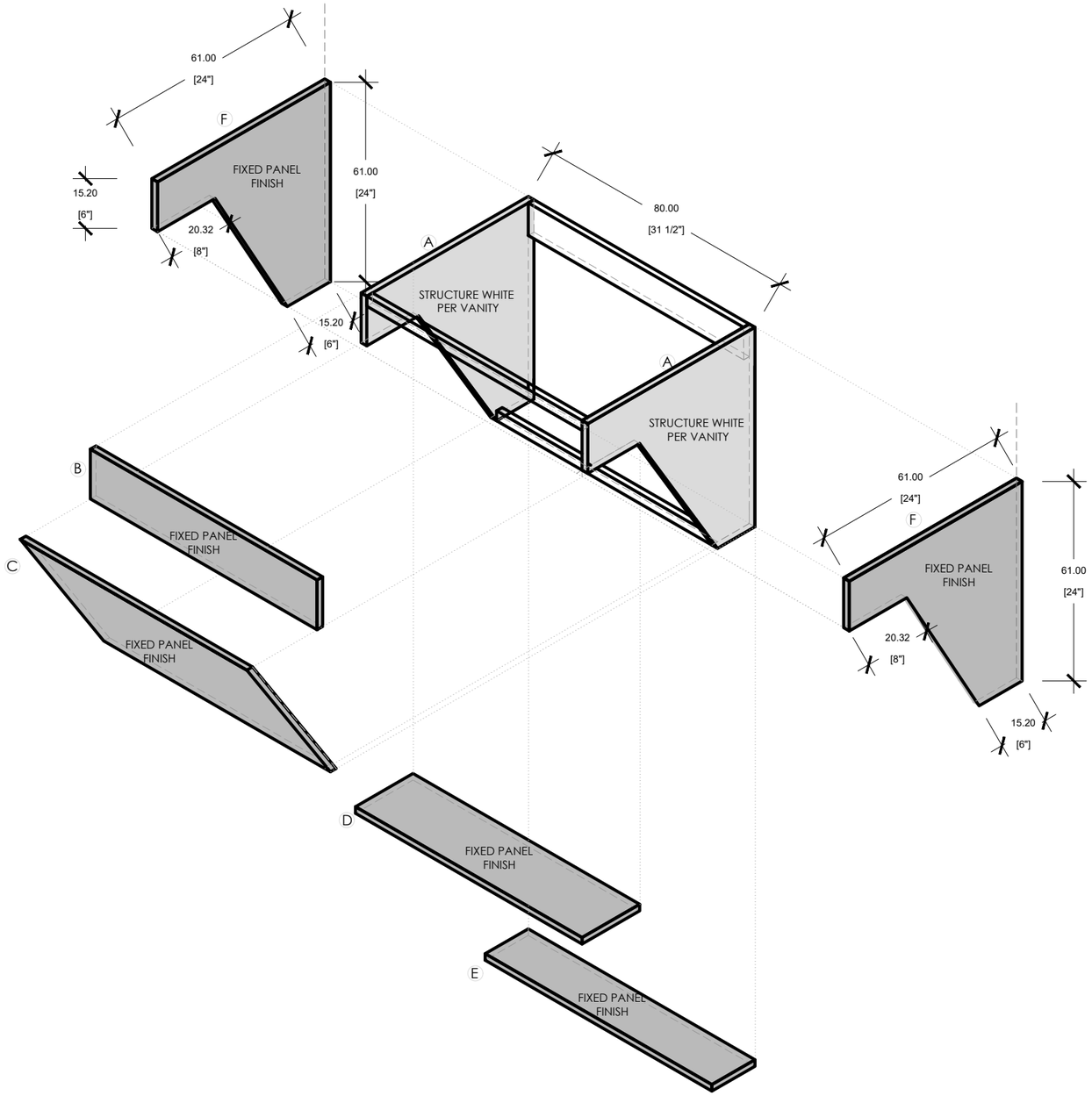


**PARTS BY VANITIES** SCALE 1/2"=1'-0"
VANITIES ADA SINK

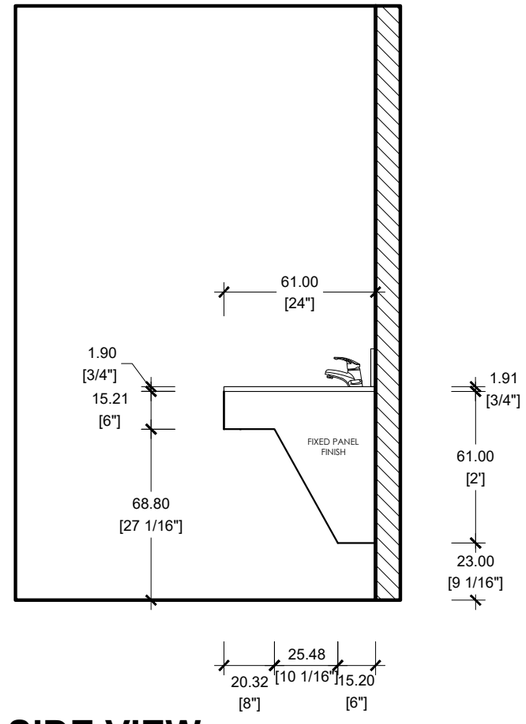


**SIDE VIEW** SCALE 1/2"=1'-0"
CASA FAMILIA / VANITY TYPE V2


ITALIAN KITCHEN AND BATH
kitchen | bath | tile | closet
1777 NW 72TH AVE. MIAMI FL, 33126
T. 305.599.9000 F. 305.599.9870


PROJECT #: 23-033
CASA FAMILIA
KITCHEN | VANITIES

DATE: 11/05/2024
REV: 5.0
DIMENSION: CM | INCHES
DRAWN BY: A.C

SHEET NUMBER
A.21